BORED TUNNELS

TUNNEL DRIVEN BY TUNNEL BORING MASCHINES
(TBM, SM) - CONTINUES EXECUTION

CONVENTIONALY DRIVEN TUNNEL (NRTM)
CYCLE EXECUTION

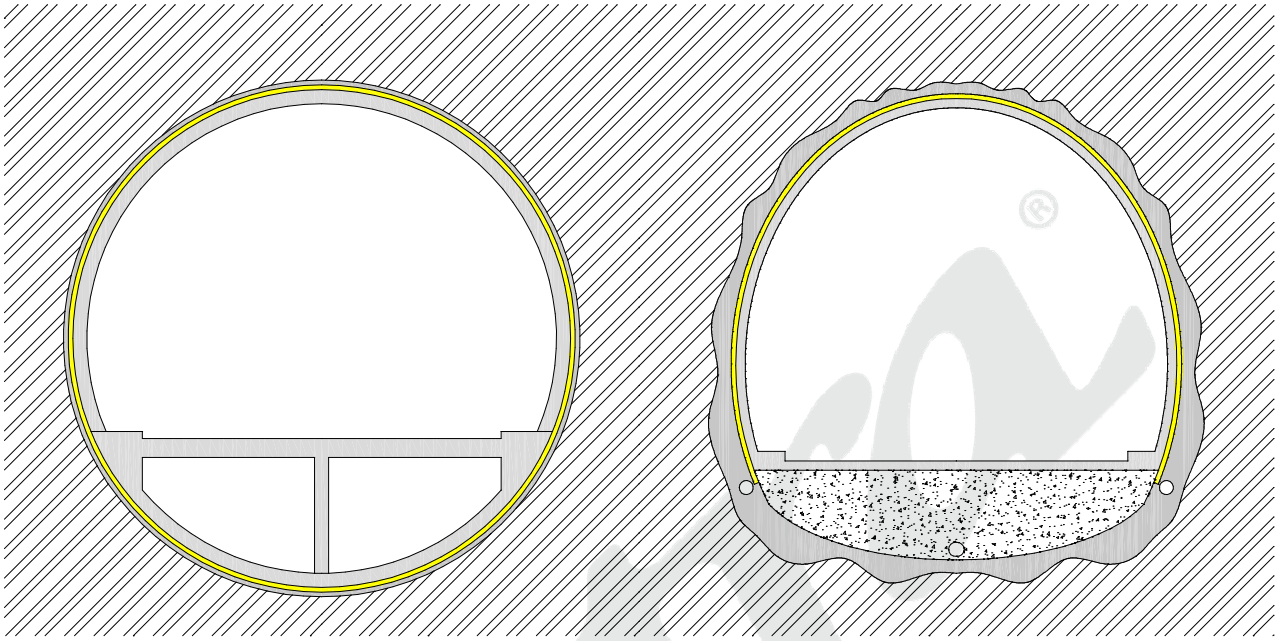

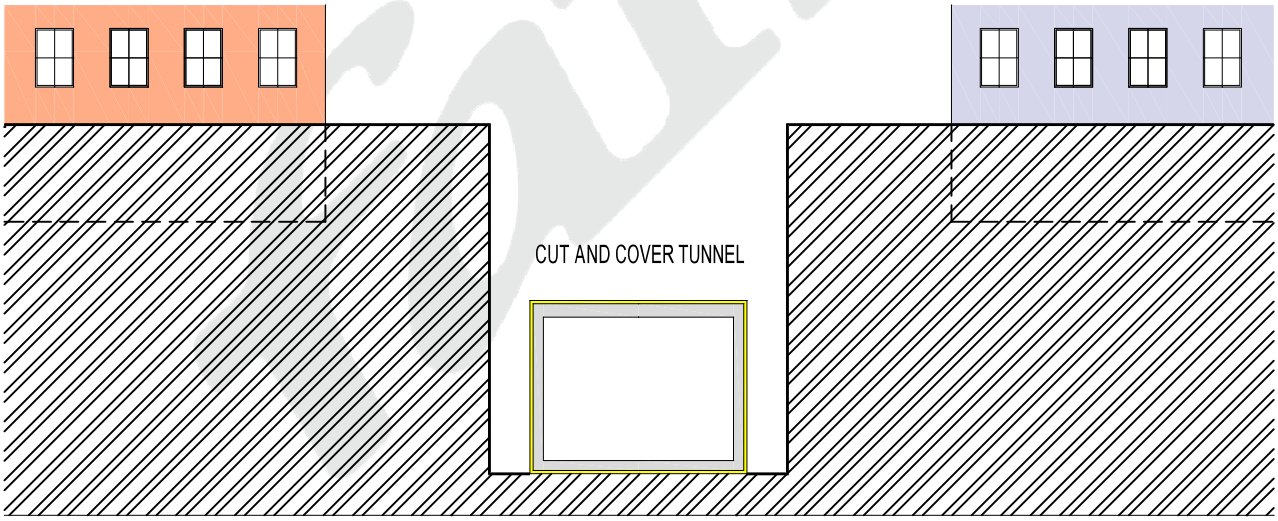

OVERFILLED TUNNEL (OVERFILLED BRIDGE)

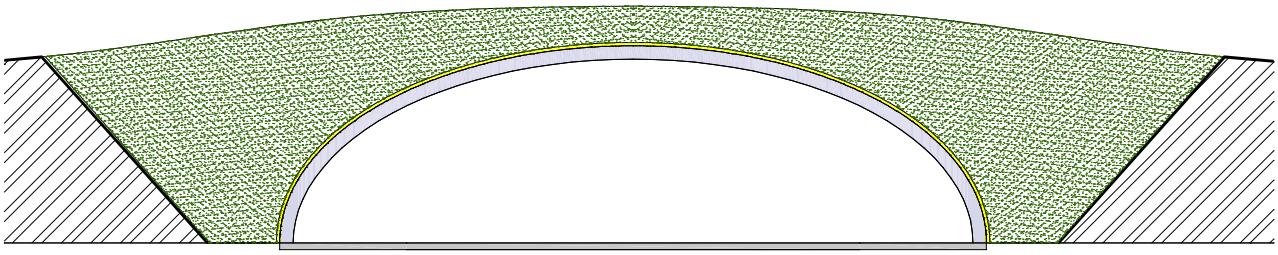

Typical tunnel section by technology of construction

DATE 01/2017

fatra
Fatra, a.s., třída Tomáše Bati 1541, 763 61 Napajedla, Česká republika
tel. +420 577 501 111, fax. +420 577 502 555, e-mail: info@fatrafol.cz, www.fatrafol.cz

DETAIL 101 T

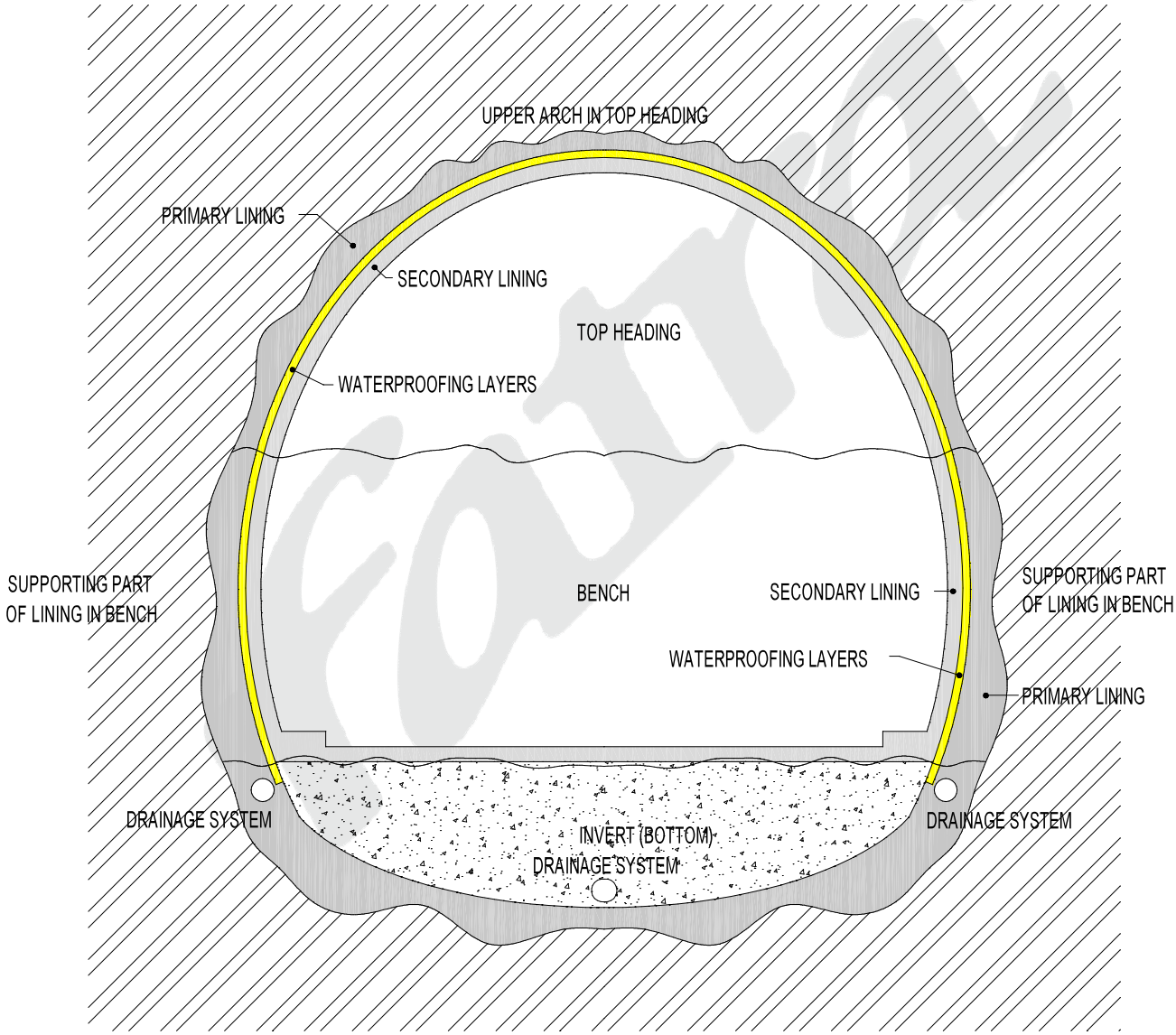

Bored tunnels terminology

DATE 01/2017

Fatra, a.s., třída Tomáše Bati 1541, 763 61 Napajedla, Česká republika
tel. +420 577 501 111, fax. +420 577 502 555, e-mail: info@fatrafol.cz, www.fatrafol.cz

DETAIL 102 T

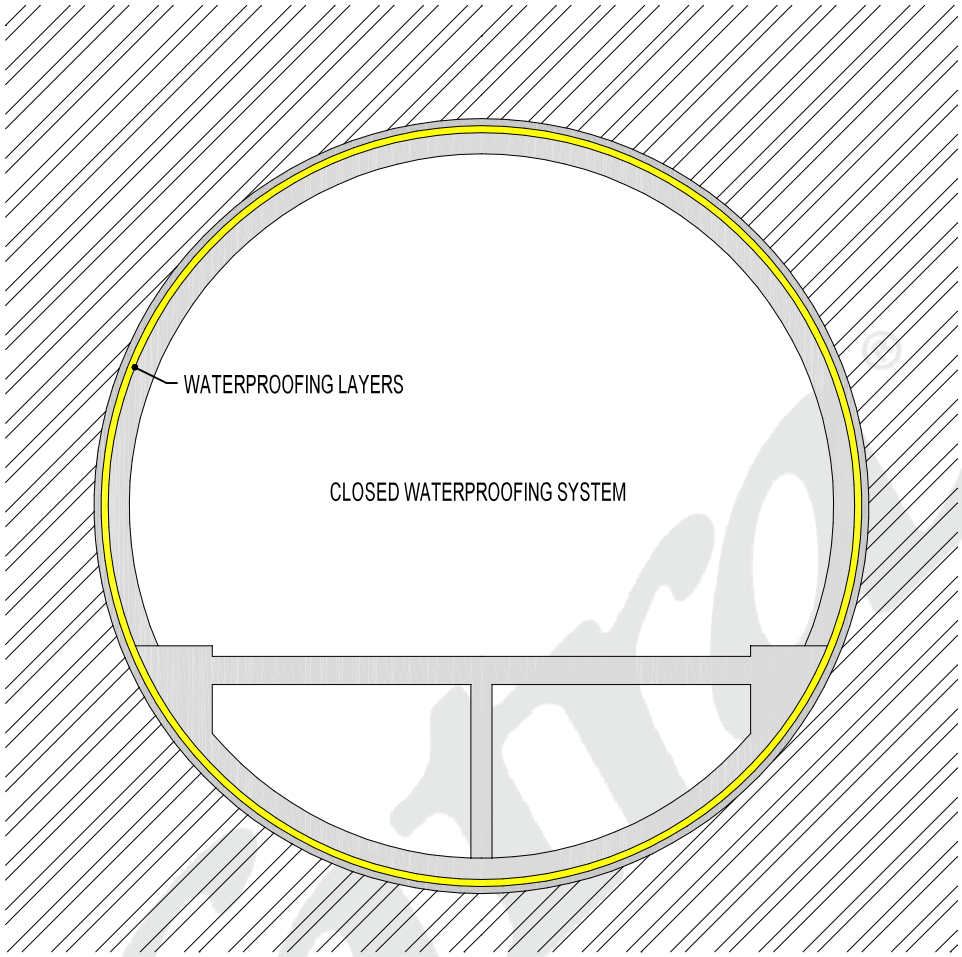

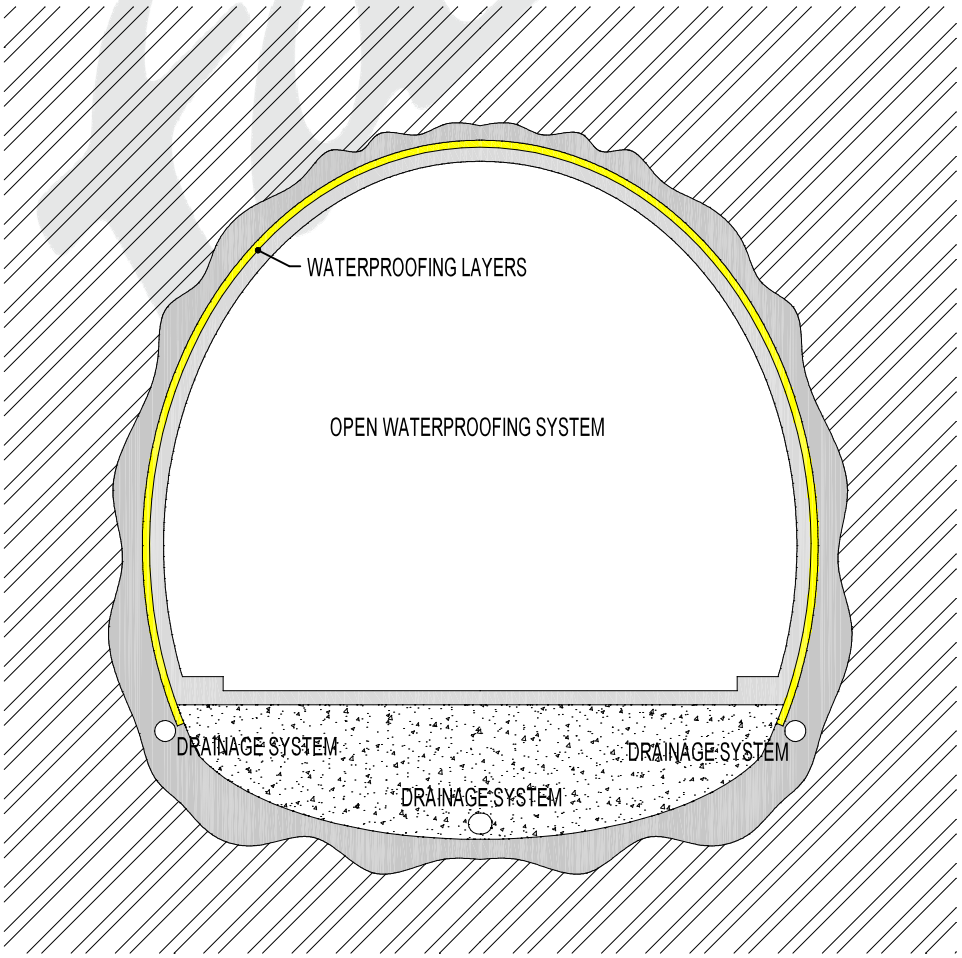

Closed and open waterproofing system

DATE 01/2017

fatra
Fatra, a.s., třída Tomáše Bati 1541, 763 61 Napajedla, Česká republika
tel. +420 577 501 111, fax. +420 577 502 555, e-mail: info@fatrafol.cz, www.fatrafol.cz

DETAIL 103 T

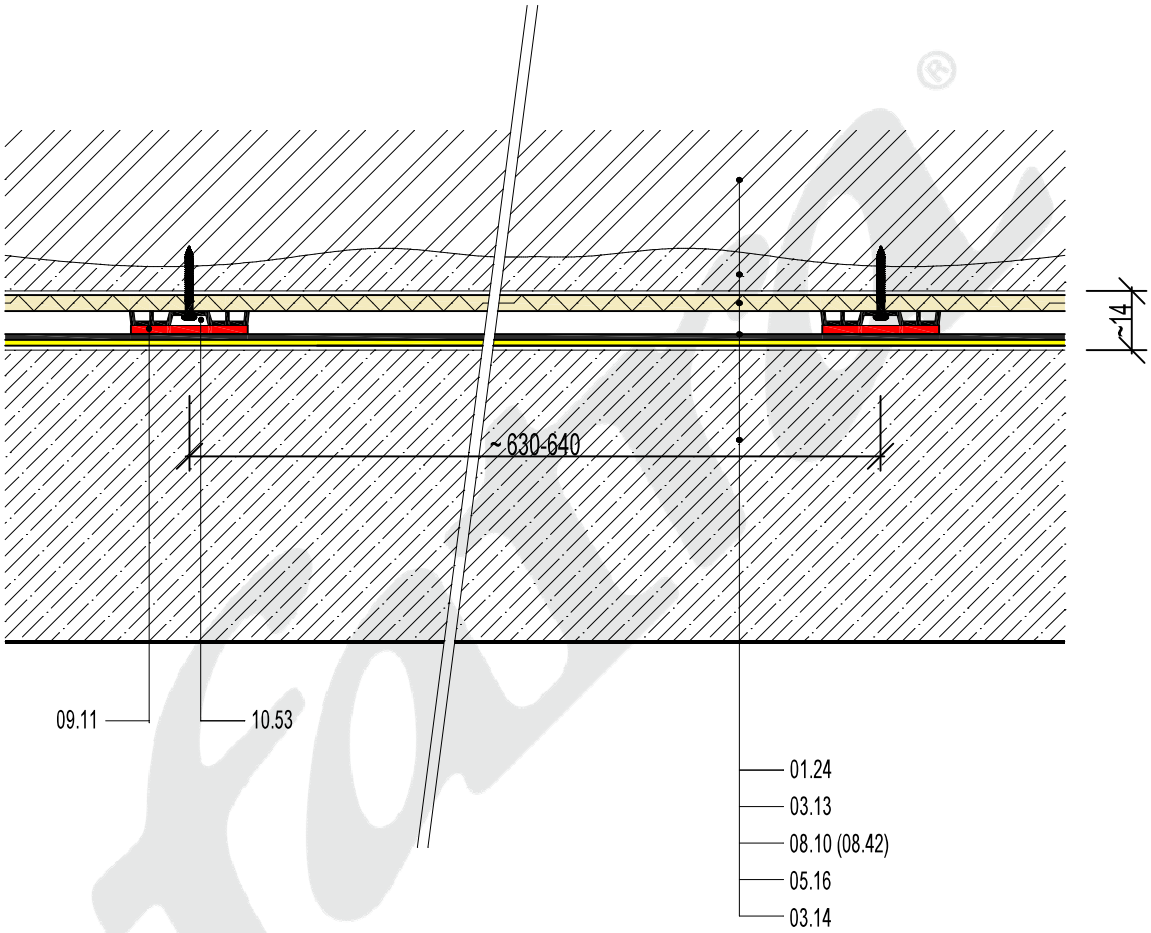

LEGEND

COMPOSITION

01.24	ROCK MASSIF
03.13	PRIMARY LINING
08.10	SEPARATION TEXTILE or
	08.42 PETEXDREN 900
05.16	FATRAFOL 803/VST
03.14	SECONDARY LINING

ACCESSORIES

09.11	HOT AIR WELD
10.53	FIXING DISK + MECHANICAL FASTENER

Waterproofing layer without protection layer - TYPE COMPOSITION A

DATE 01/2017

Fatra, a.s., třída Tomáše Bati 1541, 763 61 Napajedla, Česká republika
tel. +420 577 501 111, fax. +420 577 502 555, e-mail: info@fatrafol.cz, www.fatrafol.cz

DETAIL 201 T

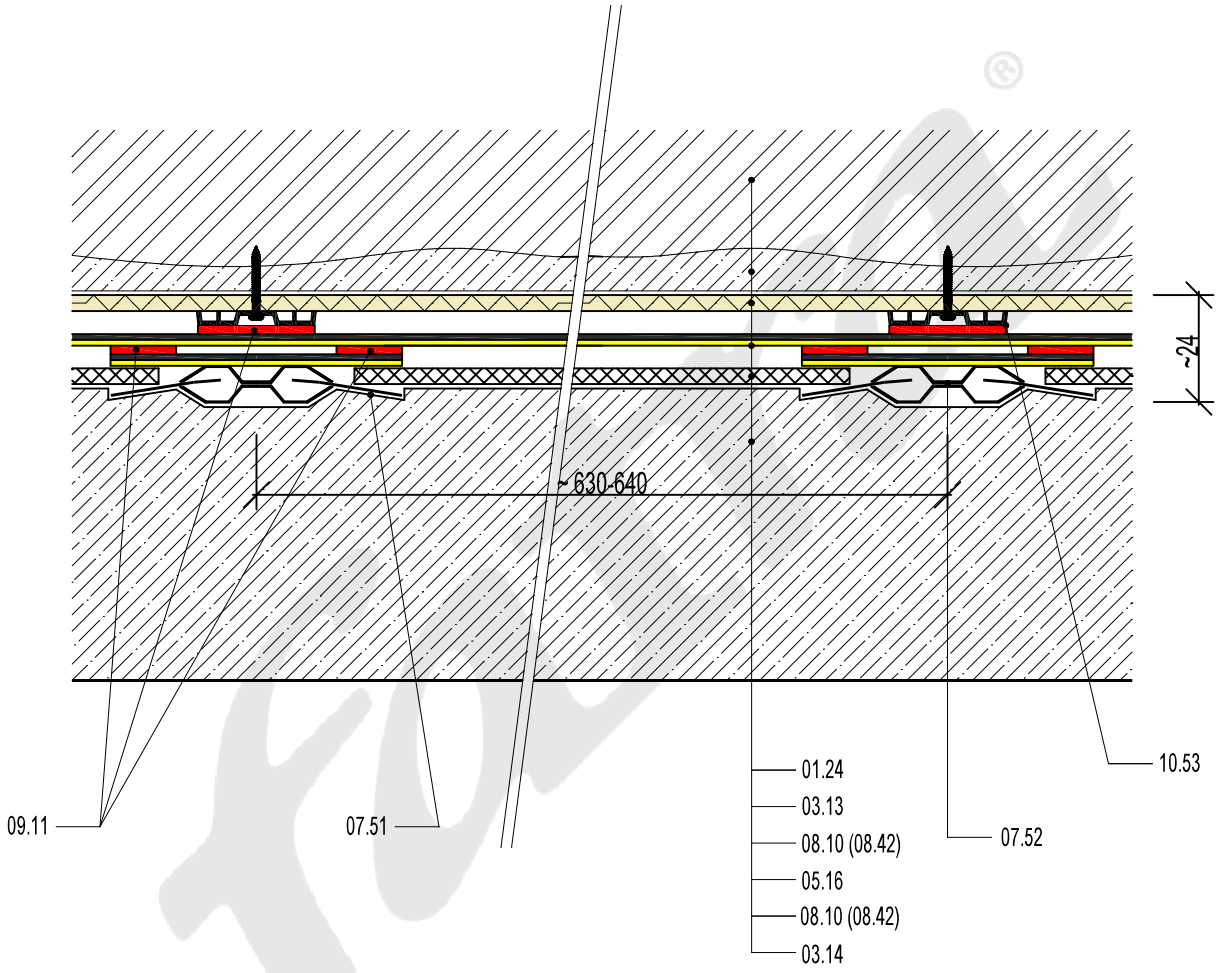

LEGENDA

SKLADBA

01.24	ROCK MASSIF
03.13	PRIMARY LINING
08.10	SEPARATION TEXTILE or 08.42 PETEXDREN 900
05.16	FATRAFOL 803/VST
08.10	SEPARATION TEXTILE or 08.42 PETEXDREN 900
03.14	SECONDARY LINING

ACCESSORIES

07.51	HP FIXING PLATE
07.52	HP-PVC FIXING POINT
09.11	HOT AIR WELD
10.53	FIXING DISK + MECHANICAL FASTENER

Waterproofing layer with protection layer from separation textile or PETEXDREN 900 - TYPE COMPOSITION B

DATE 01/2017

Fatra, a.s., třída Tomáše Bati 1541, 763 61 Napajedla, Česká republika
tel. +420 577 501 111, fax. +420 577 502 555, e-mail: info@fatrafol.cz, www.fatrafol.cz

DETAIL 202 T

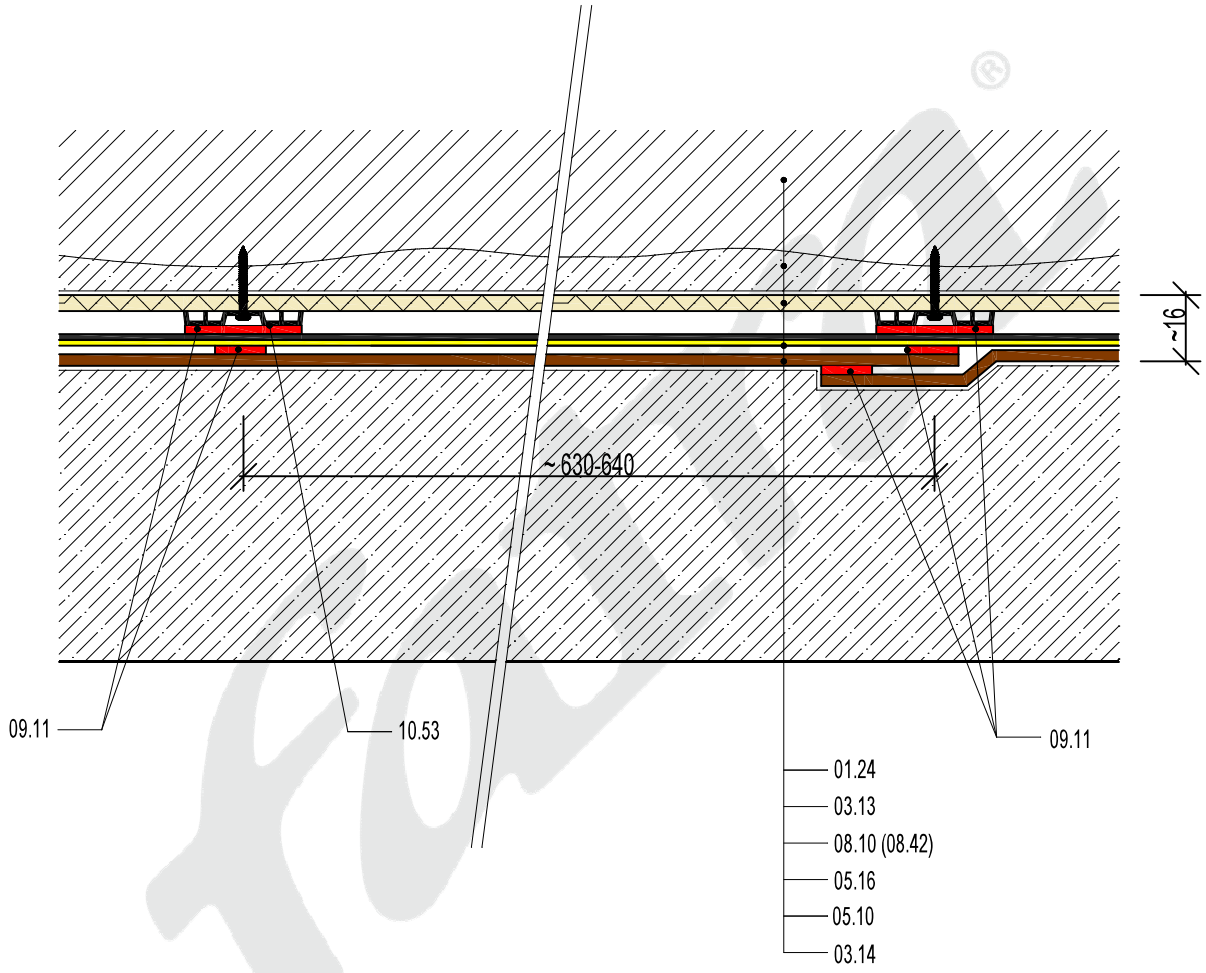

LEGEND

COMPOSITION

01.24	ROCK MASSIF
03.13	PRIMARY LINING
08.10	SEPARATION TEXTILE or
	08.42 PETEXDREN 900
05.16	FATRAFOL 803/VST
05.10	FATRAFOL 803, 803/V
03.14	SECONDARY LINING

ACCESSORIES

09.11	HOT AIR WELD
10.53	FIXING DISK + MECHANICAL FASTENER

Waterproofing layer with portection layer from PVC-P membrane - TYPE COMPOSITION C

DATE 01/2017

Fatra, a.s., třída Tomáše Bati 1541, 763 61 Napajedla, Česká republika
tel. +420 577 501 111, fax. +420 577 502 555, e-mail: info@fatrafol.cz, www.fatrafol.cz

DETAIL 203 T

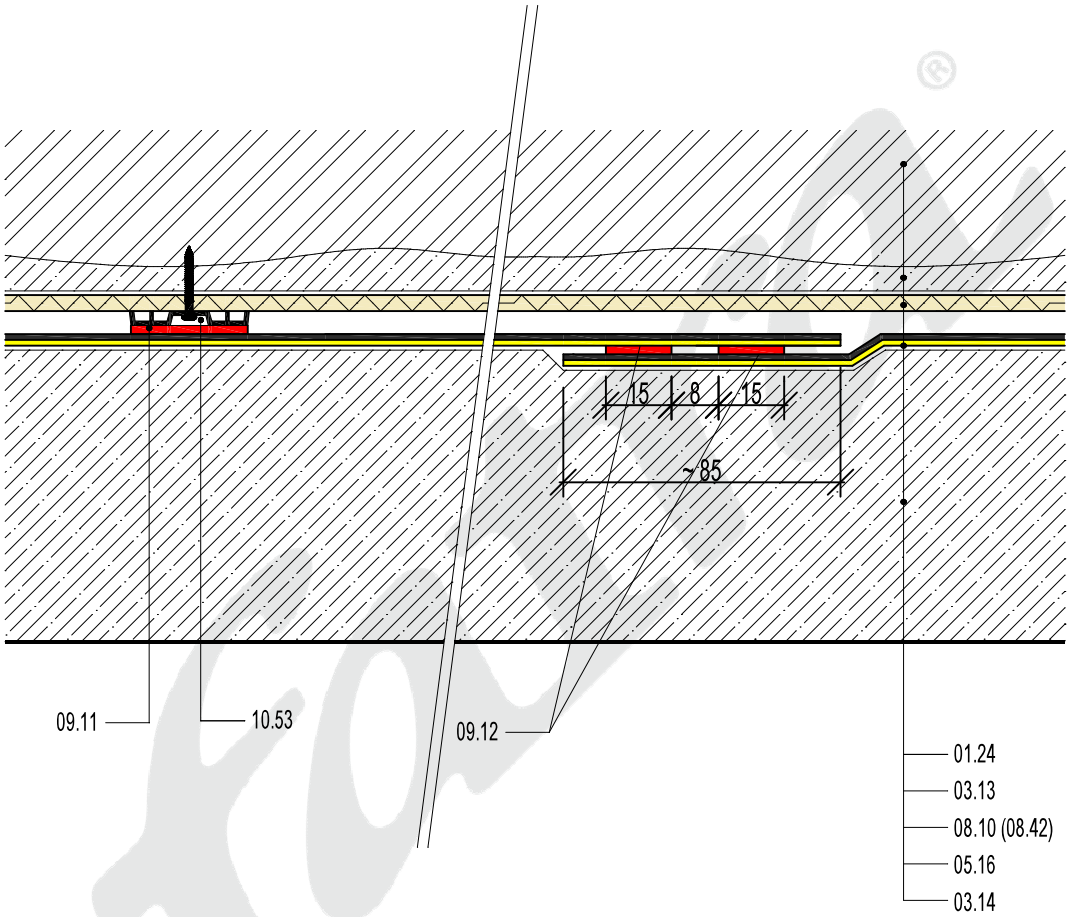

LEGEND

COMPOSITION

01.24	ROCK MASSIF
03.13	PRIMARY LINING
08.10	SEPARATION TEXTILE or 08.42 PETEXDREN 900
05.16	FATRAFOL 803/VST
03.14	SECONDARY LINING

ACCESSORIES

09.11	HOT AIR WELD
09.12	DOUBLE-TRACK HOT AIR WELD
10.53	FIXING DISK + MECHANICAL FASTENER

Double-track hot air weld

DATE 01/2017

Fatra, a.s., třída Tomáše Bati 1541, 763 61 Napajedla, Česká republika
tel. +420 577 501 111, fax. +420 577 502 555, e-mail: info@fatrafol.cz, www.fatrafol.cz

DETAIL 301 T

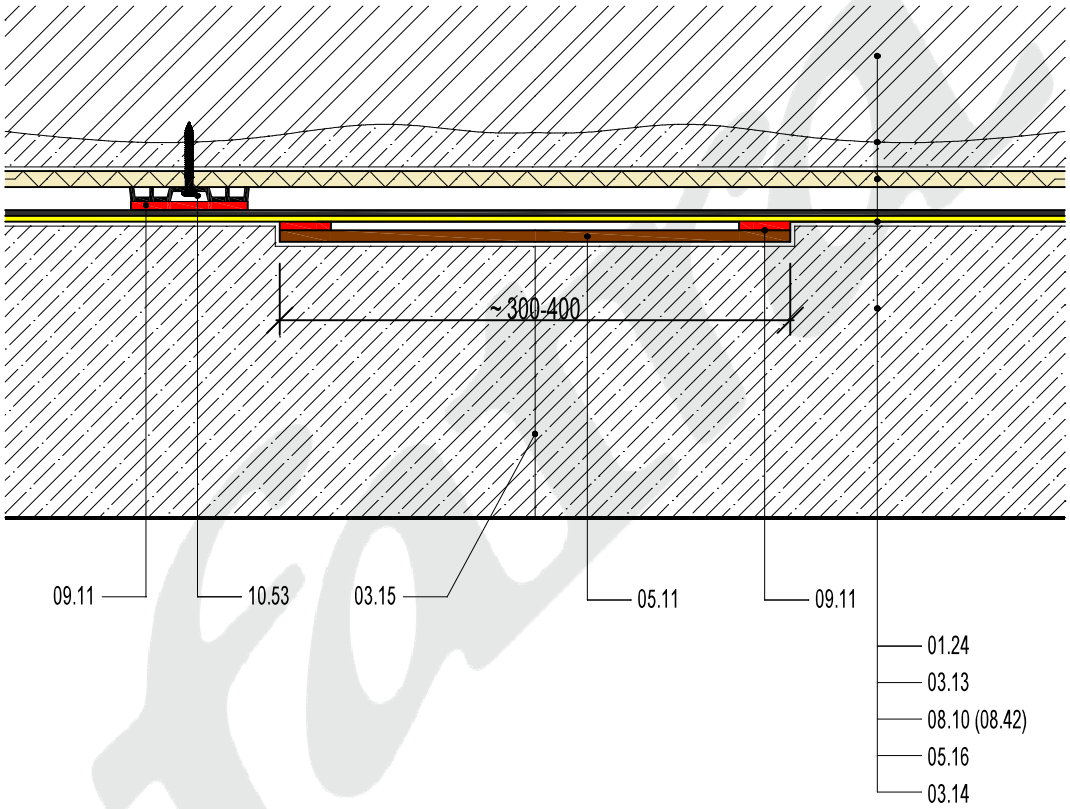

LEGEND

COMPOSITION

01.24	ROCK MASSIF
03.13	PRIMARY LINING
08.10	SEPARATION TEXTILE or
	08.42 PETEXDREN 900
05.16	FATRAFOL 803/VST
03.14	SECONDARY LINING

ACCESSORIES

03.15	CONSTRUCTION JOINT
05.11	FATRAFOL 803, 803/V
09.11	HOT AIR WELD
10.53	FIXING DISK + MECHANICAL FASTENER

Waterproofing layer-reinforcement installed on secondary lining construction joint

DATUM 01/2017

Fatra, a.s., třída Tomáše Bati 1541, 763 61 Napajedla, Česká republika
tel. +420 577 501 111, fax. +420 577 502 555, e-mail: info@fatrafol.cz, www.fatrafol.cz

DETAIL 302 T

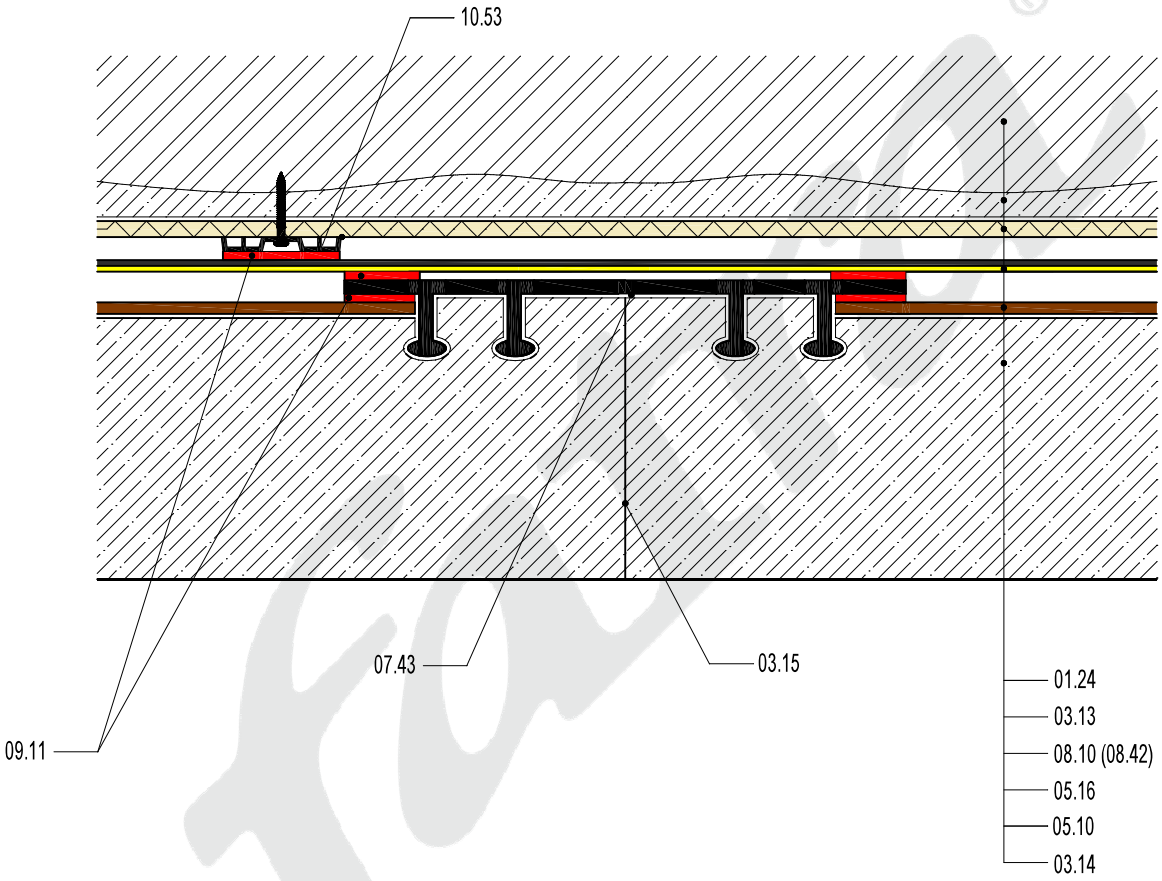

LEGEND

COMPOSITION

01.24	ROCK MASSIF
03.13	PRIMARY LINING
08.10	SEPARATION TEXTILE or
	08.42 PETEXDREN 900
05.16	FATRAFOL 803/VST
05.10	FATRAFOL 803, 803/V
03.14	SECONDARY LINING

ACCESSORIES

03.15	CONSTRUCTION JOINT
07.43	WATER STOP BAR
09.11	HOT AIR WELD
10.53	FIXING DISK + MECHANICAL FASTENER

Waterstop bar installed on secondary lining construction joint

DATE 01/2017

Fatra, a.s., třída Tomáše Bati 1541, 763 61 Napajedla, Česká republika
tel. +420 577 501 111, fax. +420 577 502 555, e-mail: info@fatrafol.cz, www.fatrafol.cz

DETAIL 303 T

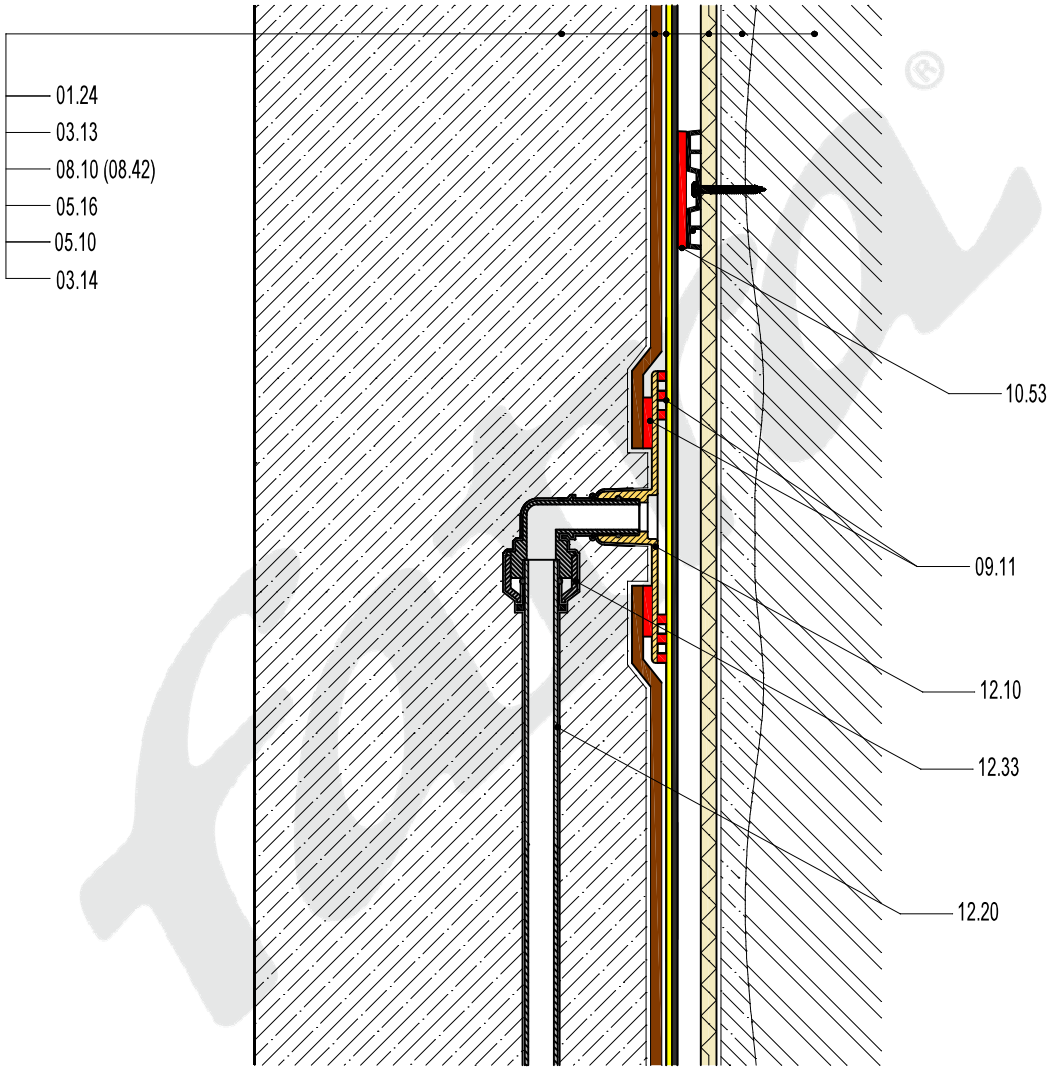

LEGEND

COMPOSITION

01.24	ROCK MASSIF
03.13	PRIMARY LINING
08.10	SEPARATION TEXTILE or
	08.42 PETEXDREN 900
05.16	FATRAFOL 803/VST
05.10	FATRAFOL 803, 803/V
03.14	SECONDARY LINING

ACCESSORIES

09.11	CONSTRUCTION JOINT
10.53	FIXING DISK + MECHANICAL FASTENER
12.10	INJECTION PORT
12.20	INJECTION PIPE 15BPERT
12.33	STEM ELBOW PEM 221515W

Injection pipe and injection port joint in type composition C

DATE 01/2017

Fatra, a.s., třída Tomáše Bati 1541, 763 61 Napajedla, Česká republika
tel. +420 577 501 111, fax. +420 577 502 555, e-mail: info@fatrafol.cz, www.fatrafol.cz

DETAIL 401 T

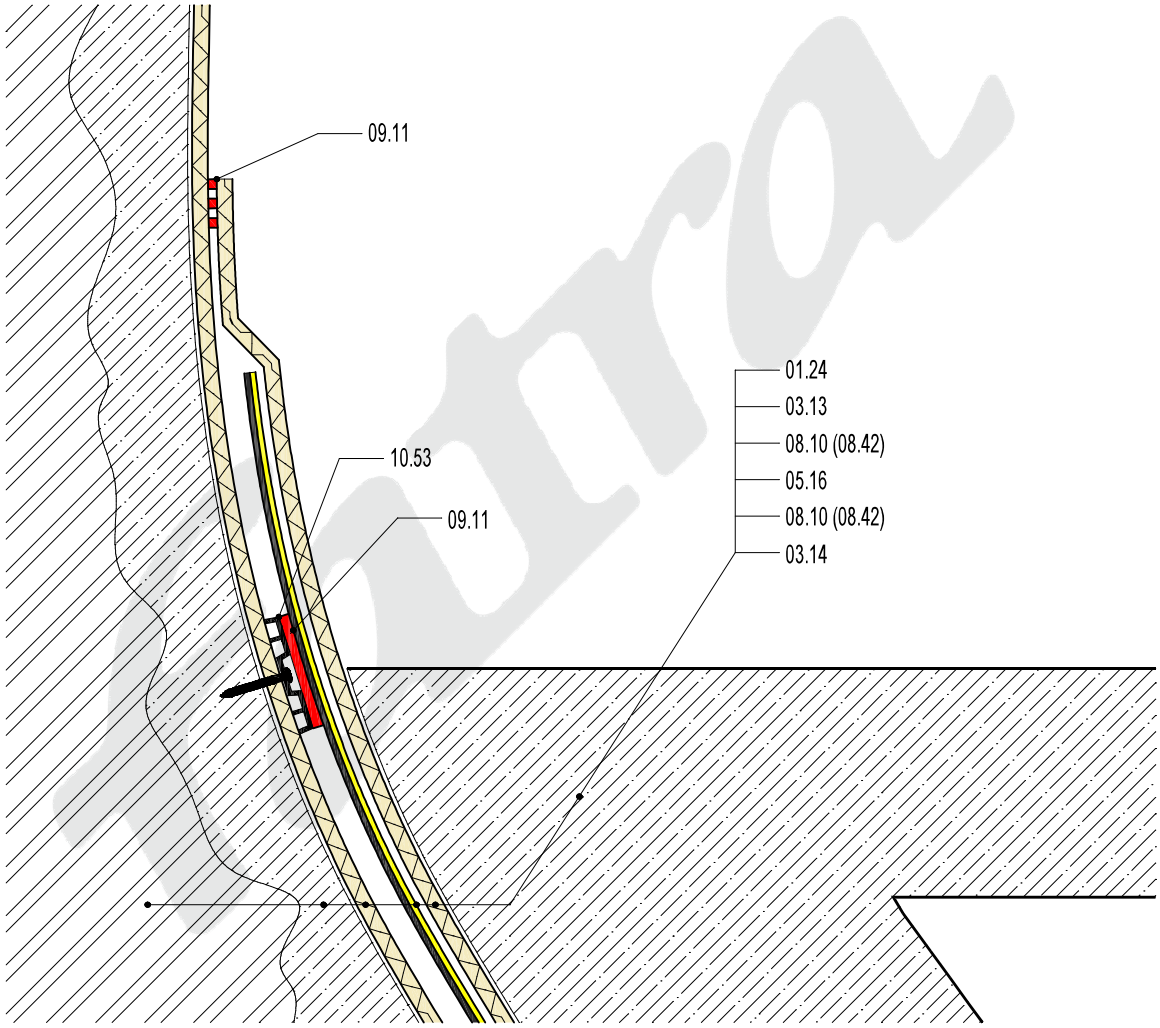

LEGEND

COMPOSITION

01.24	ROCK MASSIF
03.13	PRIMARY LINING
08.10	SEPARATION TEXTILE or 08.42 PETEXDREN 900
05.16	FATRAFOL 803/VST
08.10	SEPARATION TEXTILE or 08.42 PETEXDREN 900
03.14	SECONDARY LINING

ACCESSORIES

09.11	HOT AIR WELD
10.53	FIXING DISK + MECHANICAL FASTENER

Membrane joint - Phase 1

DATE 01/2017

Fatra, a.s., třída Tomáše Bati 1541, 763 61 Napajedla, Česká republika
tel. +420 577 501 111, fax. +420 577 502 555, e-mail: info@fatrafol.cz, www.fatrafol.cz

DETAIL 501 T

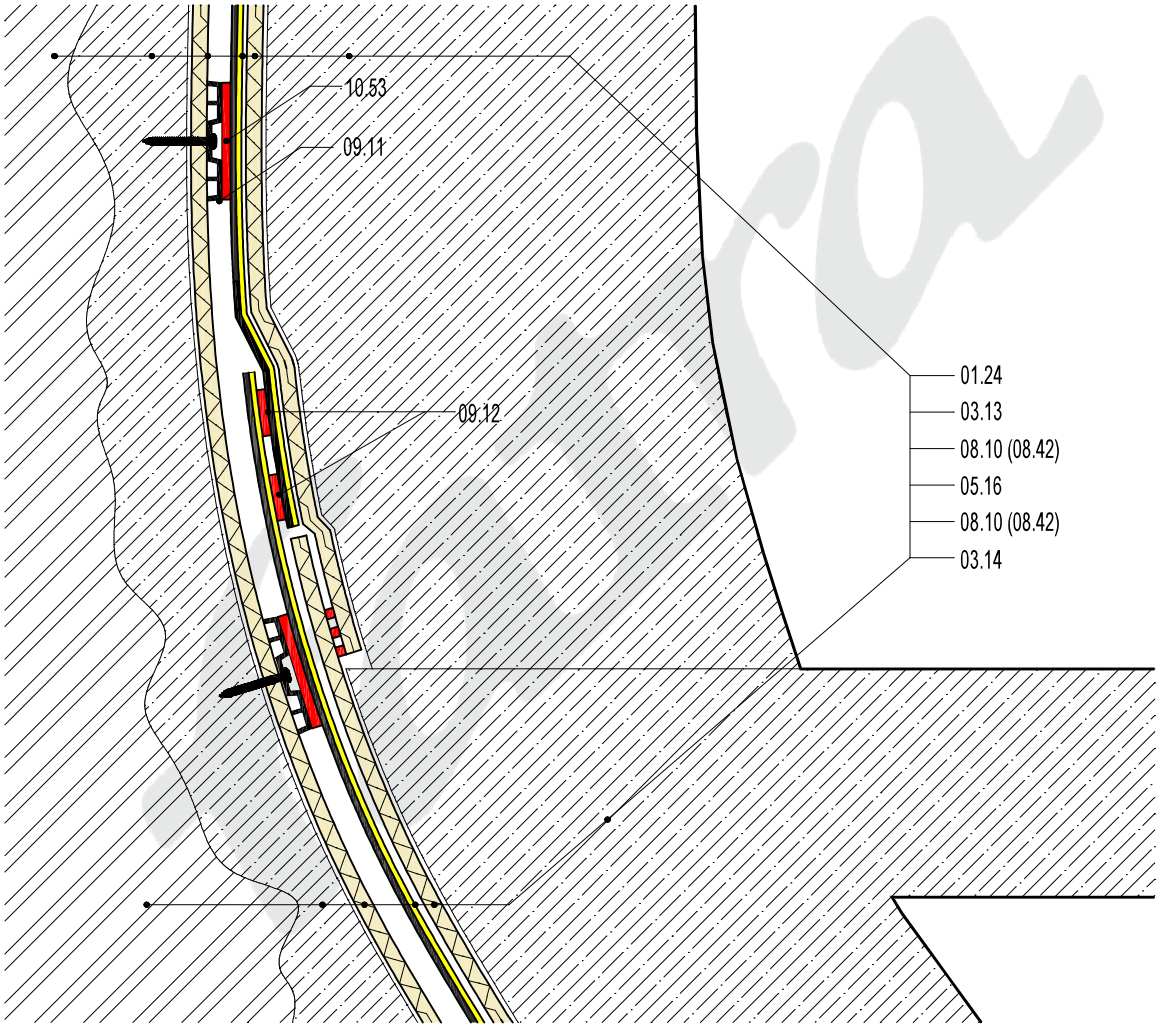

LEGEND

COMPOSITION

01.24	ROCK MASSIF
03.13	PRIMARY LINING
08.10	SEPARATION TEXTILE or 08.42 PETEXDREN 900
05.16	FATRAFOL 803/VST
08.10	SEPARATION TEXTILE or 08.42 PETEXDREN 900
03.14	SECONDARY LINING

ACCESSORIES

09.11	HOT AIR WELD
09.12	DOUBLE-TRACK HOT AIR WELD
10.53	FIXING DISK + MECHANICAL FASTENER

Membrane joint - Phase 2

DATE 01/2017

Fatra, a.s., třída Tomáše Bati 1541, 763 61 Napajedla, Česká republika
tel. +420 577 501 111, fax. +420 577 502 555, e-mail: info@fatrafol.cz, www.fatrafol.cz

DETAIL 502 T

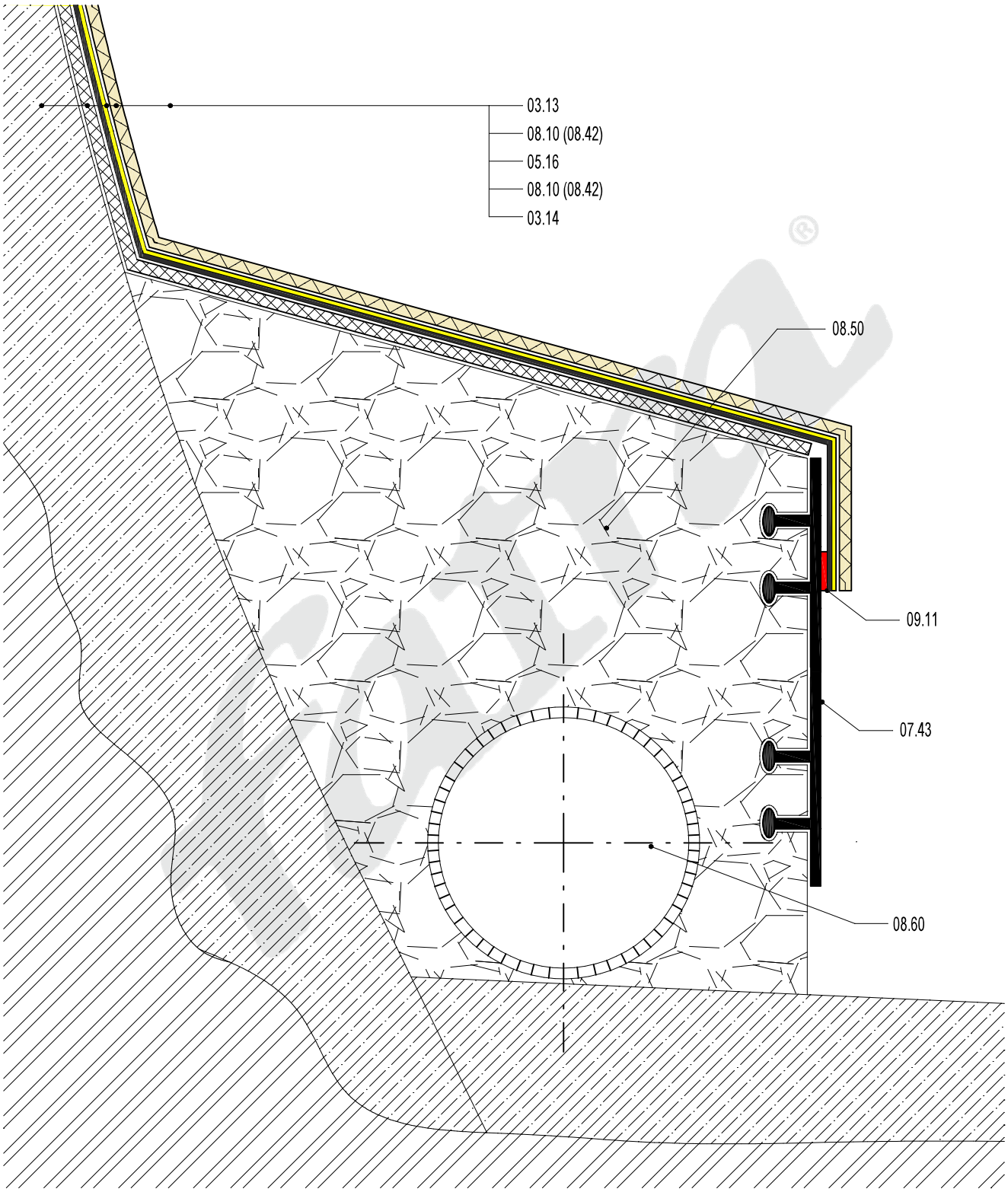

LEGEND

COMPOSITION

03.13	PRIMARY LINING
08.10	SEPARATION TEXTILE or 08.42 PETEXDREN 900
05.16	FATRAFOL 803/VST
08.10	SEPARATION TEXTILE or 08.42 PETEXDREN 900
03.14	SECONDARY LINING

ACCESSORIES

07.43	WATER STOP BAR
08.50	FILTRATION CONCRETE
08.60	DRAINAGE PIPE
09.11	HOT AIR WELD

Open waterproofing system ending by welding membrane on water stop bar next to drainage pipe

DATE 01/2017

fatra

Fatra, a.s., třída Tomáše Bati 1541, 763 61 Napajedla, Česká republika
tel. +420 577 501 111, fax. +420 577 502 555, e-mail: info@fatrafol.cz, www.fatrafol.cz

DETAIL 503 T

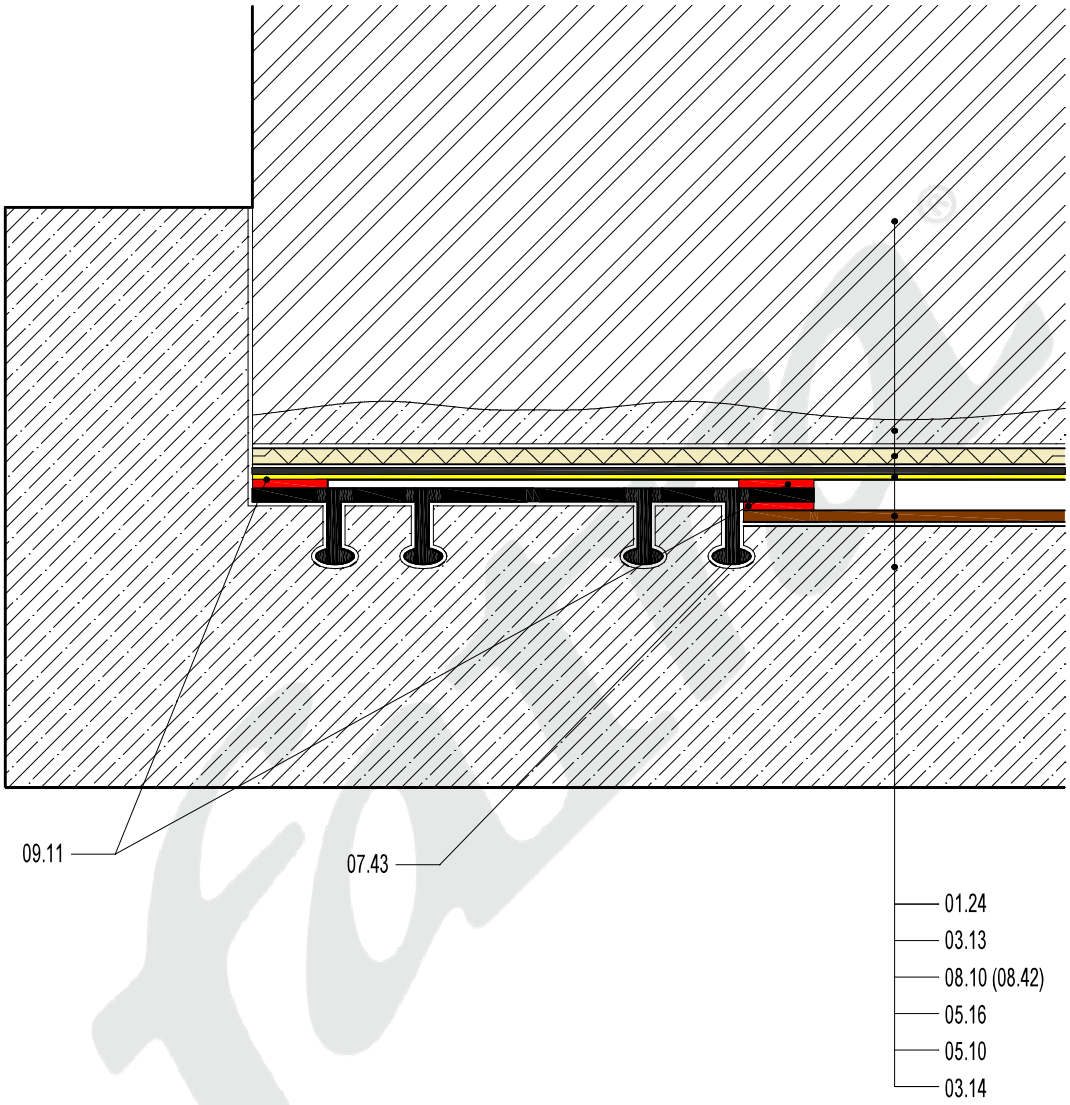

LEGEND

COMPOSITION

01.24	ROCK MASSIF
03.13	PRIMARY LINING
08.10	SEPARATION TEXTILE or 08.42 PETEXDREN 900
05.16	FATRAFOL 803/VST
05.10	FATRAFOL 803, 803/V
03.14	SECONDARY LINING

ACCESSORIES

07.43	WATER STOP BAR
09.11	HOT AIR WELD

Waterproofing system ending with water stop bar by entry of tunnel

DATE 01/2017

Fatra, a.s., třída Tomáše Bati 1541, 763 61 Napajedla, Česká republika
tel. +420 577 501 111, fax. +420 577 502 555, e-mail: info@fatrafol.cz, www.fatrafol.cz

DETAIL 504 T

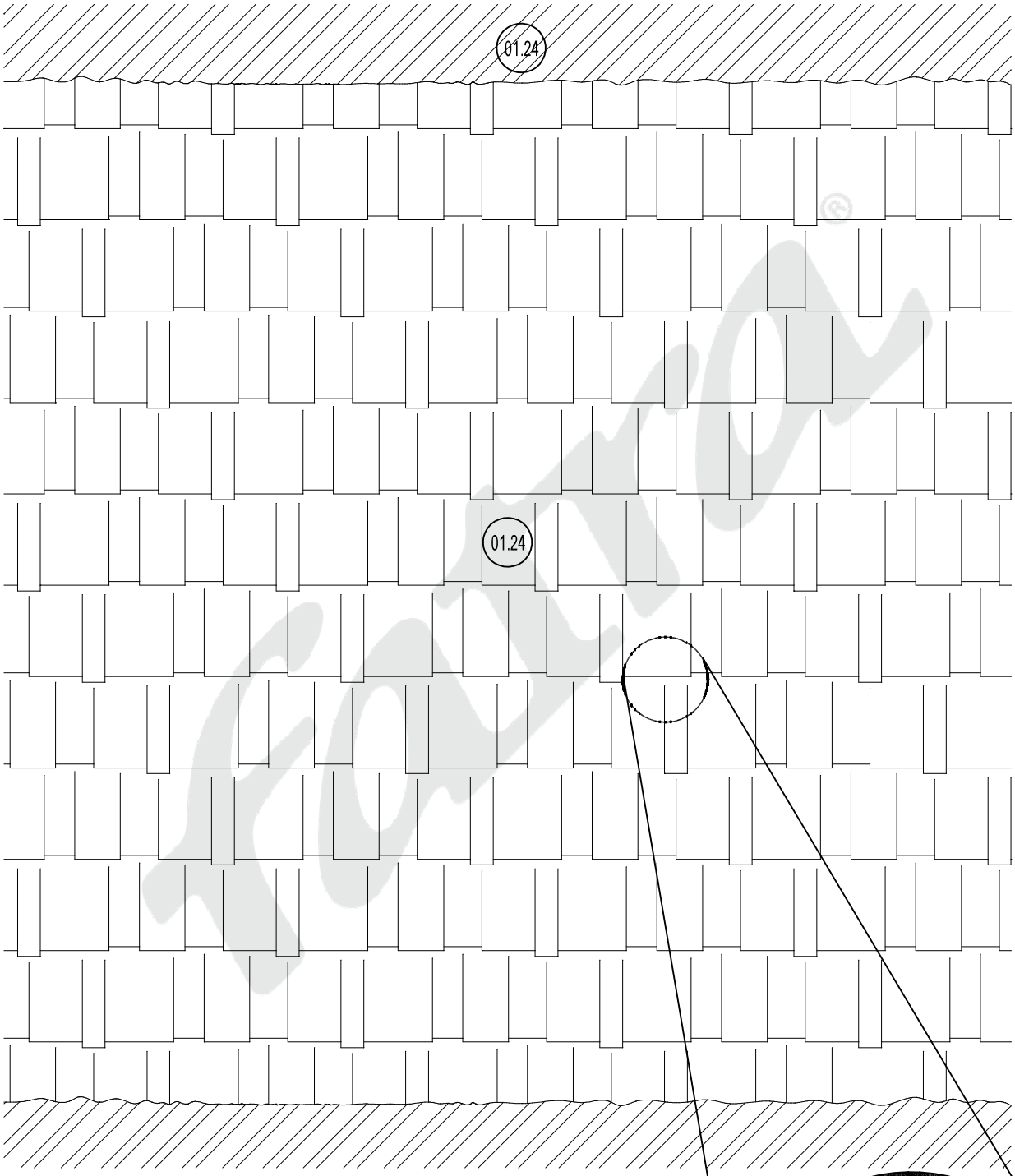

01.24	ROCK MASSIF
03.13	PRIMARY LINING
03.14	SECONDARY LINING
03.15	CONSTRUCTION JOINT
05.11	FATRAFOL 803, 803/V
05.16	FATRAFOL 803/VST
08.10	SEPARATION TEXTILE
09.11	HOT AIR WELD
09.12	DOUBLE TRACK HOT AIR WELD
10.53	FIXING DISK + MECHANICAL FASTENER

Open waterproofing system - 1. stage - excavation

DATE 01/2017

Fatra, a.s., třída Tomáše Bati 1541, 763 61 Napajedla, Česká republika
tel. +420 577 501 111, fax. +420 577 502 555, e-mail: info@fatrafol.cz, www.fatrafol.cz

DETAIL 601 T

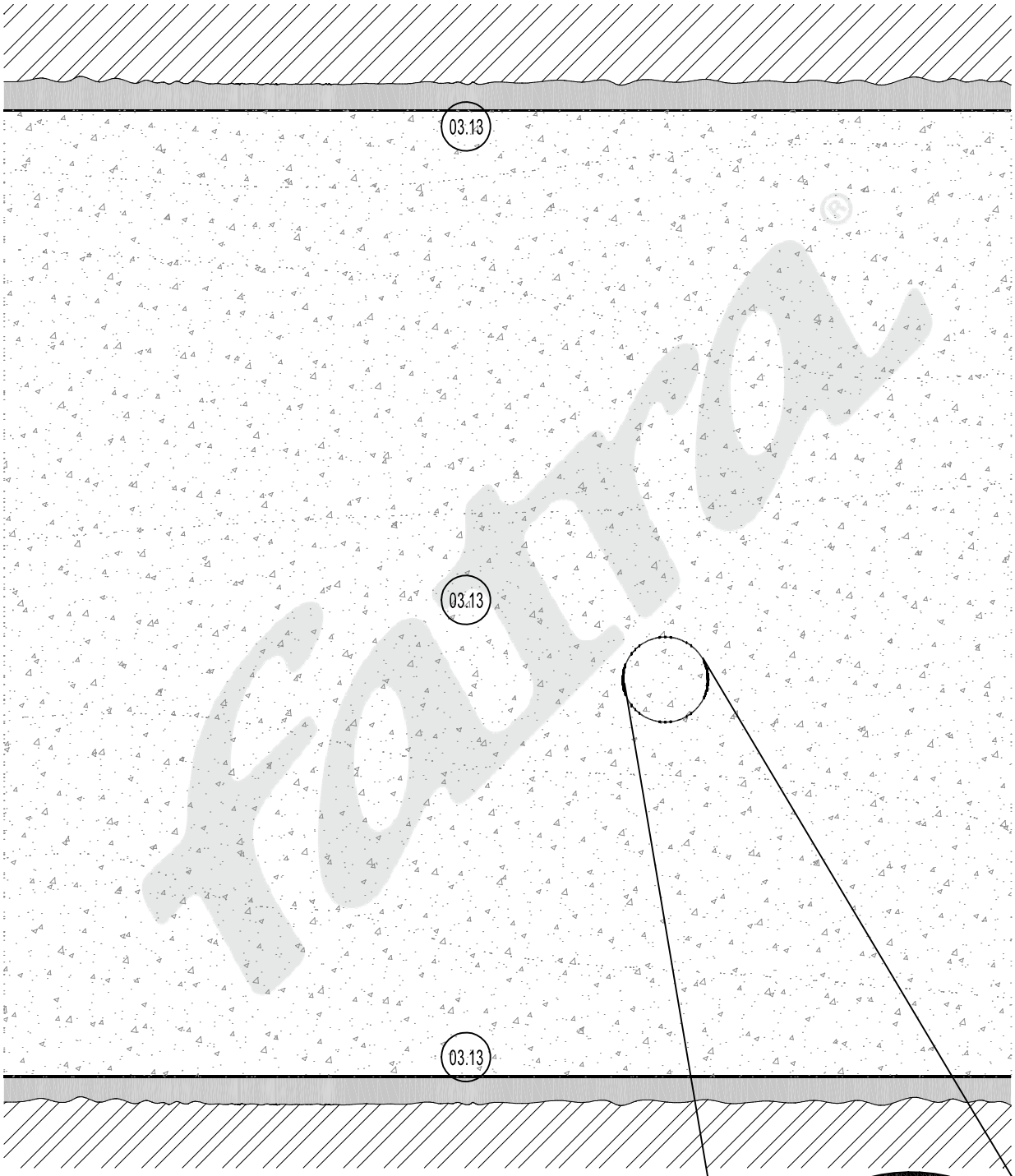

01.24	ROCK MASSIF
03.13	PRIMARY LINING
03.14	SECONDARY LINING
03.15	CONSTRUCTION JOINT
05.11	FATRAFOL 803, 803/V
05.16	FATRAFOL 803/VST
08.10	SEPARATION TEXTILE
09.11	HOT AIR WELD
09.12	DOUBLE TRACK HOT AIR WELD
10.53	FIXING DISK + MECHANICAL FASTENER

Open waterproofing system - 2. stage - primary lining (shotcrete)

DATE 01/2017

Fatra, a.s., třída Tomáše Bati 1541, 763 61 Napajedla, Česká republika
tel. +420 577 501 111, fax. +420 577 502 555, e-mail: info@fatrafol.cz, www.fatrafol.cz

DETAIL 602 T

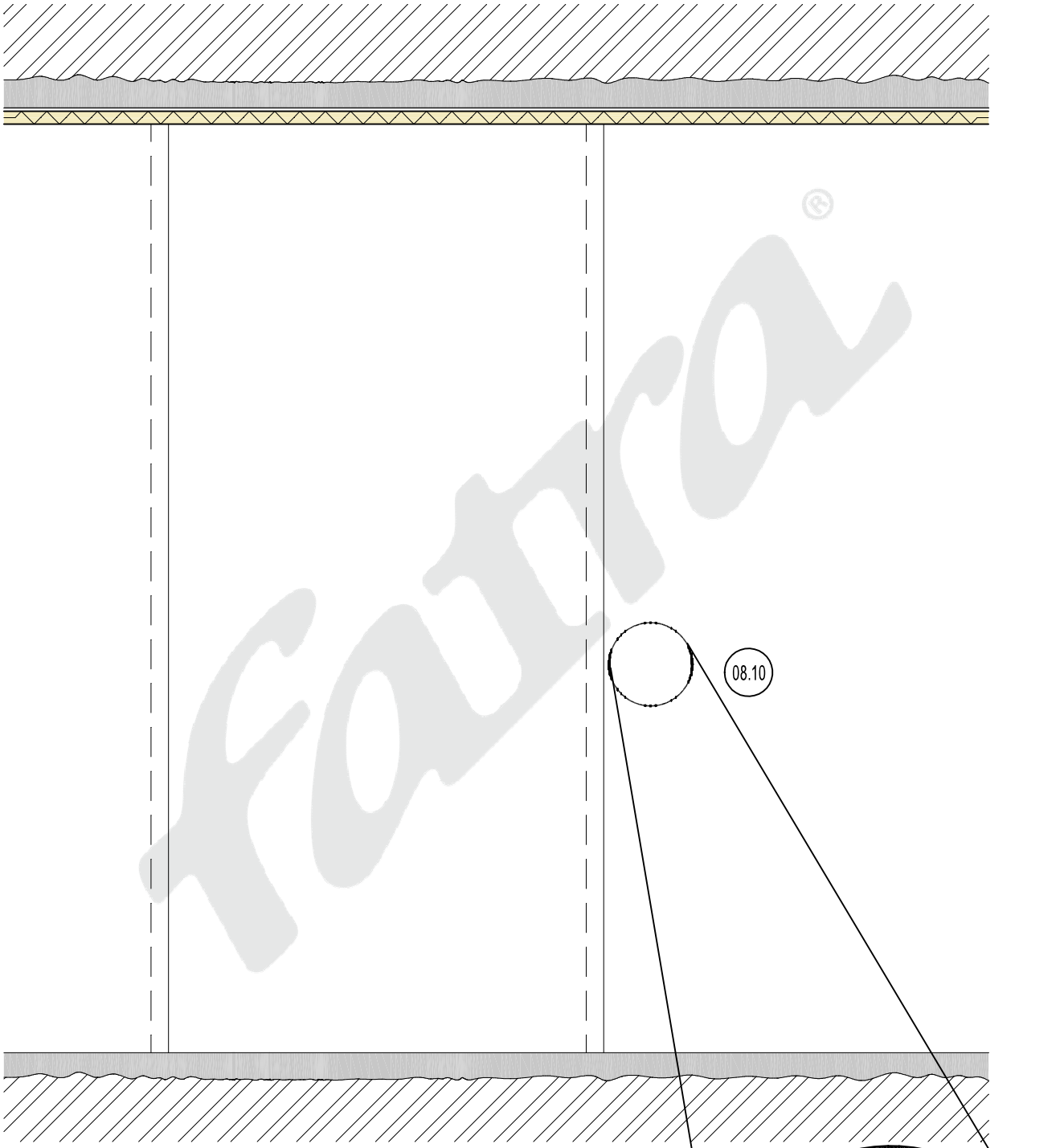

01.24	ROCK MASSIF
03.13	PRIMARY LINING
03.14	SECONDARY LINING
03.15	CONSTRUCTION JOINT
05.11	FATRAFOL 803, 803/V
05.16	FATRAFOL 803/VST
08.10	SEPARATION TEXTILE
09.11	HOT AIR WELD
09.12	DOUBLE TRACK HOT AIR WELD
10.53	FIXING DISK + MECHANICAL FASTENER

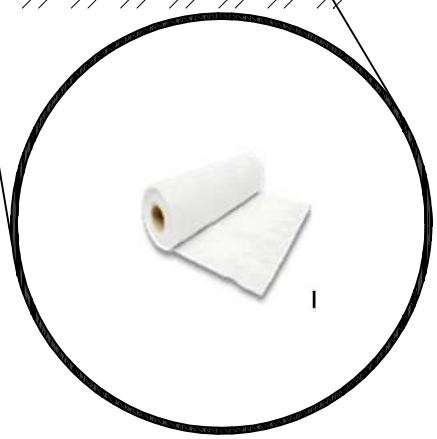

Open waterproofing system - 3. stage - separation textile installation

DATE 01/2017

Fatra, a.s., třída Tomáše Bati 1541, 763 61 Napajedla, Česká republika
tel. +420 577 501 111, fax. +420 577 502 555, e-mail: info@fatrafol.cz, www.fatrafol.cz

DETAIL 603 T

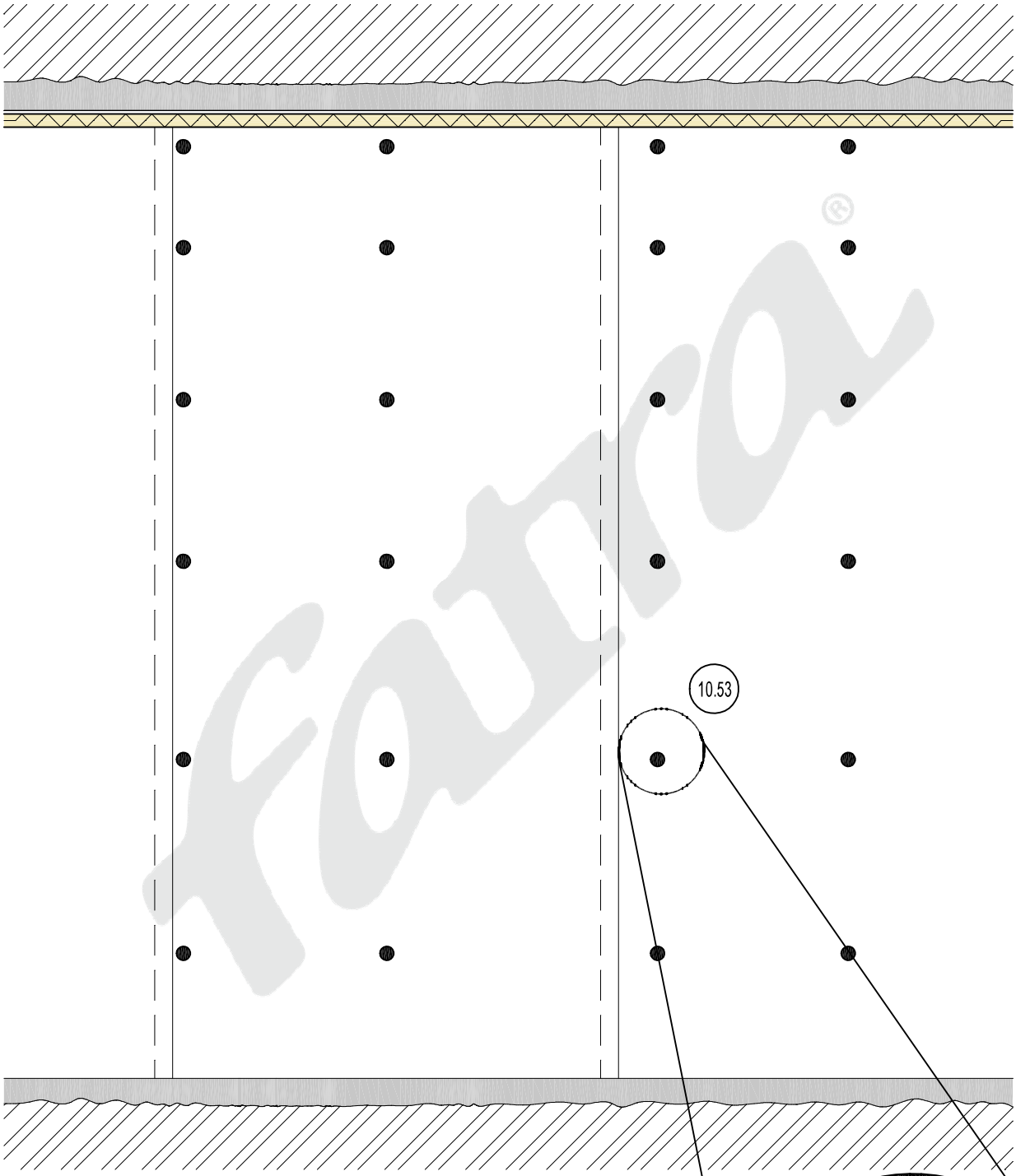

01.24	ROCK MASSIF
03.13	PRIMARY LINING
03.14	SECONDARY LINING
03.15	CONSTRUCTION JOINT
05.11	FATRAFOL 803, 803/V
05.16	FATRAFOL 803/VST
08.10	SEPARATION TEXTILE
09.11	HOT AIR WELD
09.12	DOUBLE TRACK HOT AIR WELD
10.53	FIXING DISK + MECHANICAL FASTENER

Open waterproofing system - 4. stage - separation textile fastening by fixing disk

DATE 01/2017

Fatra, a.s., třída Tomáše Bati 1541, 763 61 Napajedla, Česká republika
tel. +420 577 501 111, fax. +420 577 502 555, e-mail: info@fatrafol.cz, www.fatrafol.cz

DETAIL 604 T

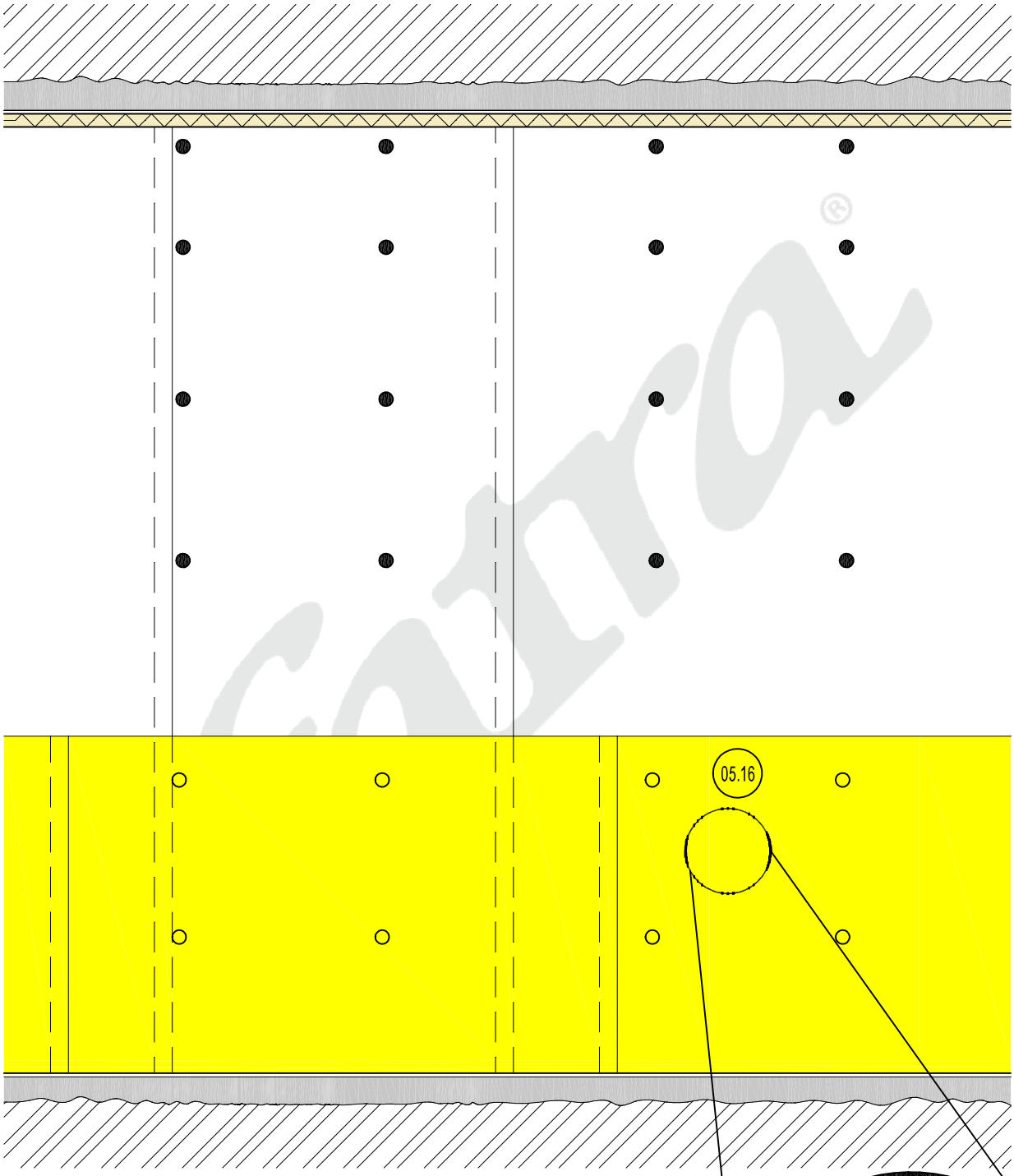

01.24	ROCK MASSIF
03.13	PRIMARY LINING
03.14	SECONDARY LINING
03.15	CONSTRUCTION JOINT
05.11	FATRAFOL 803, 803/V
05.16	FATRAFOL 803/VST
08.10	SEPARATION TEXTILE
09.11	HOT AIR WELD
09.12	DOUBLE TRACK HOT AIR WELD
10.53	FIXING DISK + MECHANICAL FASTENER

Open waterproofing system - 5. stage - installation of waterproofing membrane in lower section of the Bench

DATE 01/2017

Fatra, a.s., třída Tomáše Bati 1541, 763 61 Napajedla, Česká republika
tel. +420 577 501 111, fax. +420 577 502 555, e-mail: info@fatrafol.cz, www.fatrafol.cz

DETAIL 605 T

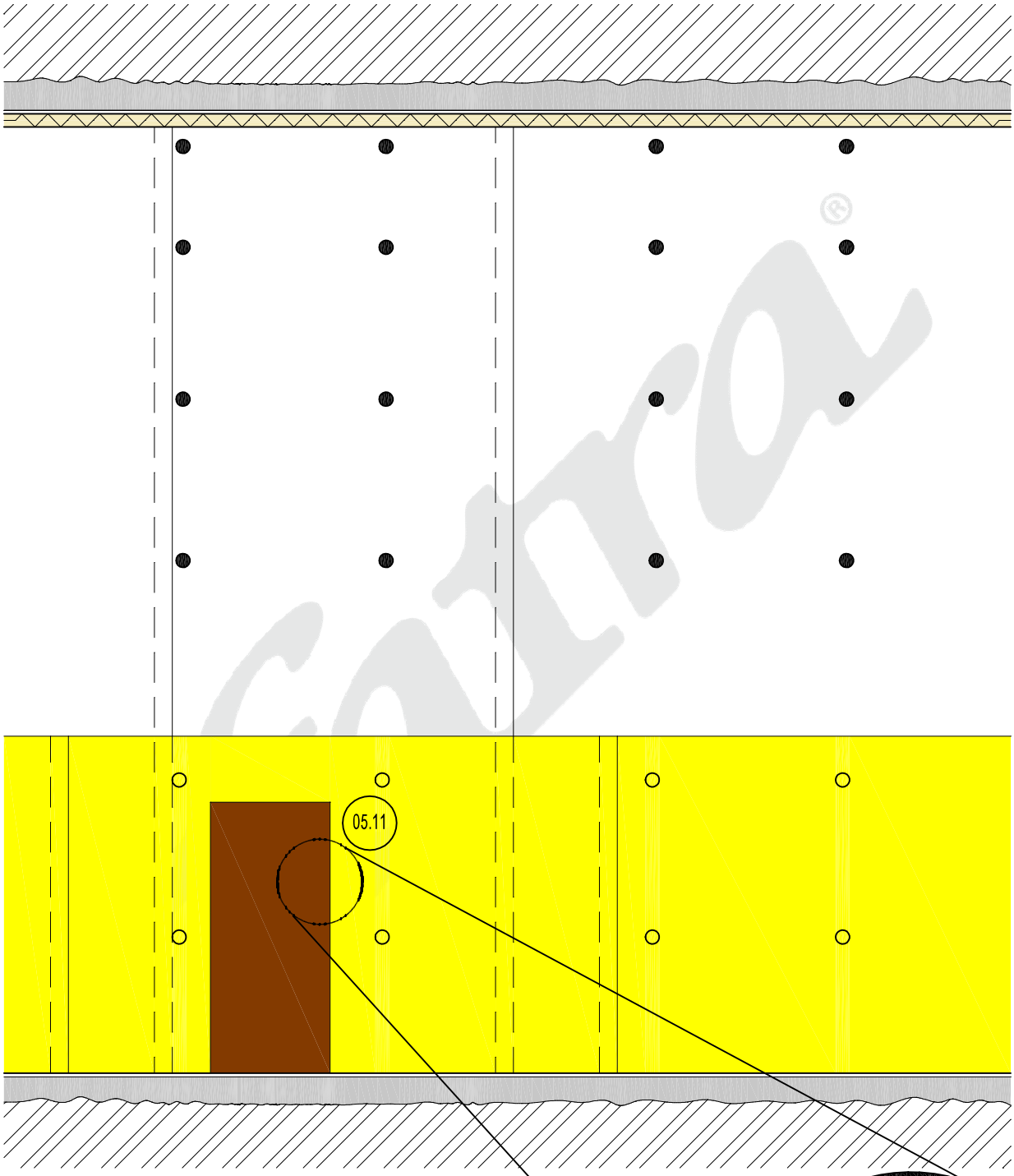

01.24	ROCK MASSIF
03.13	PRIMARY LINING
03.14	SECONDARY LINING
03.15	CONSTRUCTION JOINT
05.11	FATRAFOL 803, 803/V
05.16	FATRAFOL 803/VST
08.10	SEPARATION TEXTILE
09.11	HOT AIR WELD
09.12	DOUBLE TRACK HOT AIR WELD
10.53	FIXING DISK + MECHANICAL FASTENER

Open waterproofing system - 6. stage - installation of PVC membrane reinforcement in place of future construction joint of secondary linning

DATE 01/2017

Fatra, a.s., třída Tomáše Bati 1541, 763 61 Napajedla, Česká republika
tel. +420 577 501 111, fax. +420 577 502 555, e-mail: info@fatrafol.cz, www.fatrafol.cz

DETAIL 606 T

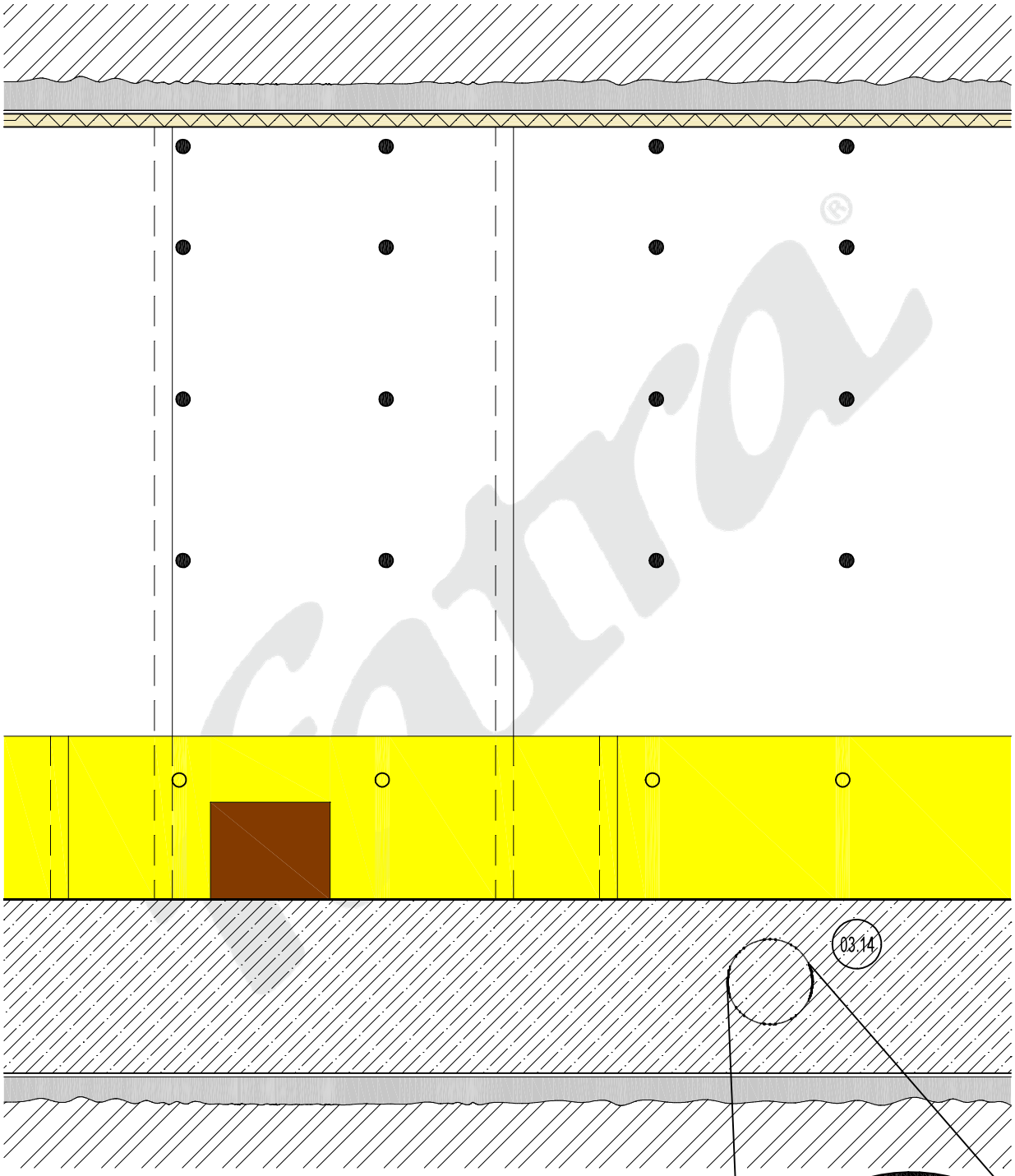

01.24	ROCK MASSIF
03.13	PRIMARY LINING
03.14	SECONDARY LINING
03.15	CONSTRUCTION JOINT
05.11	FATRAFOL 803, 803/V
05.16	FATRAFOL 803/VST
08.10	SEPARATION TEXTILE
09.11	HOT AIR WELD
09.12	DOUBLE TRACK HOT AIR WELD
10.53	FIXING DISK + MECHANICAL FASTENER

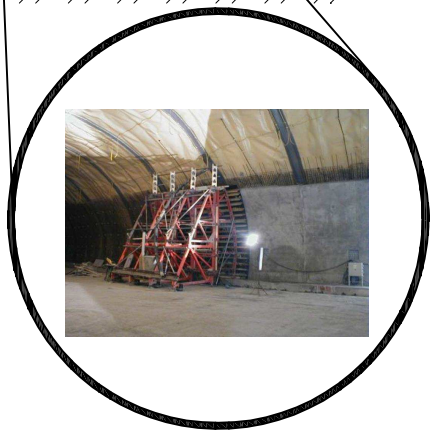

Open waterproofing system - 7. stage - Bottom and part of Secondary linning concreting

DATE 01/2017

Fatra, a.s., třída Tomáše Bati 1541, 763 61 Napajedla, Česká republika
tel. +420 577 501 111, fax. +420 577 502 555, e-mail: info@fatrafol.cz, www.fatrafol.cz

DETAIL 607 T

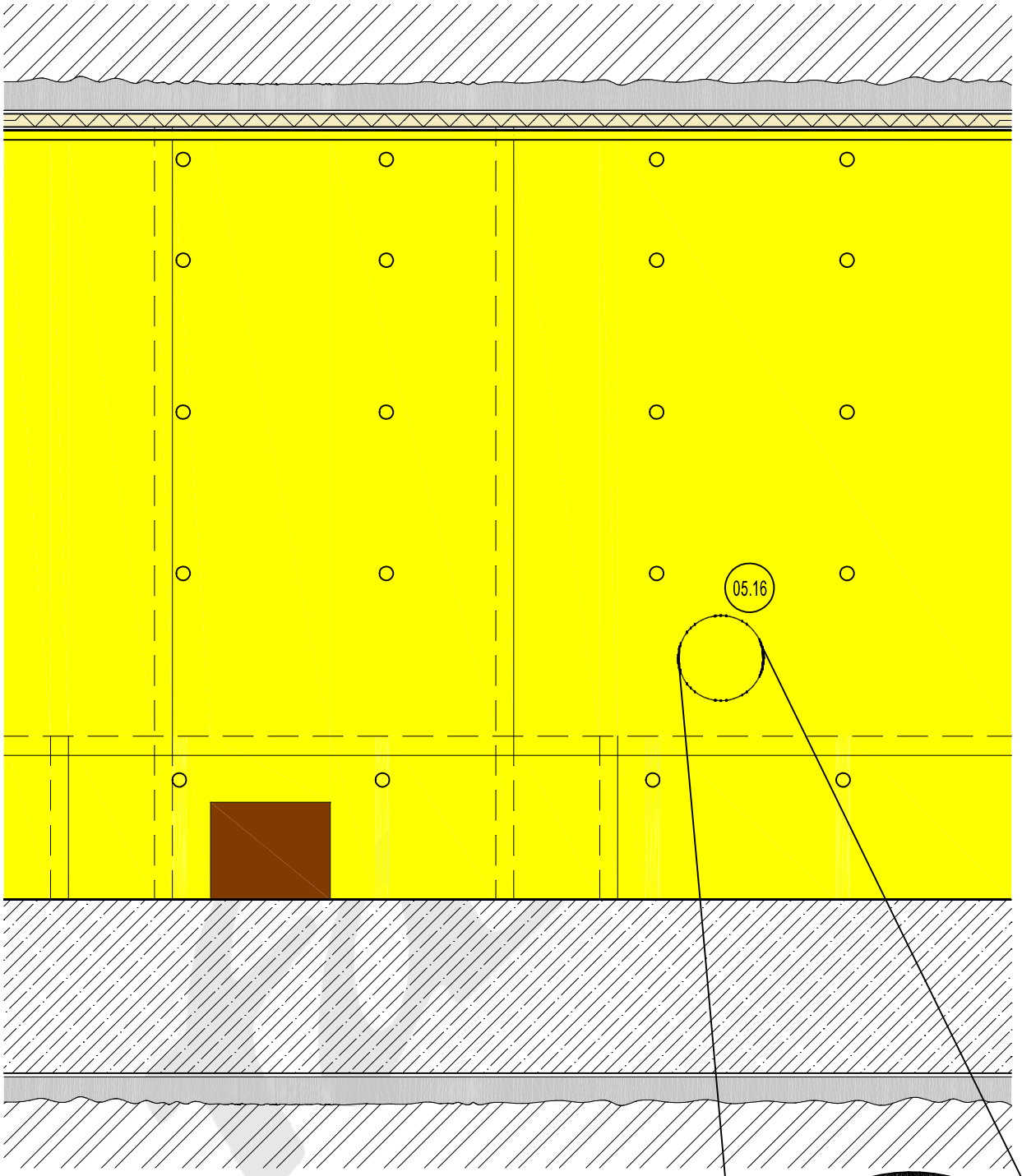

01.24	ROCK MASSIF
03.13	PRIMARY LINING
03.14	SECONDARY LINING
03.15	CONSTRUCTION JOINT
05.11	FATRAFOL 803, 803/V
05.16	FATRAFOL 803/VST
08.10	SEPARATION TEXTILE
09.11	HOT AIR WELD
09.12	DOUBLE TRACK HOT AIR WELD
10.53	FIXING DISK + MECHANICAL FASTENER

Open waterproofing system - 8. stage - waterproofing membrane installation in the rest of Bench and Top heading

DATE 01/2017

Fatra, a.s., třída Tomáše Bati 1541, 763 61 Napajedla, Česká republika
tel. +420 577 501 111, fax. +420 577 502 555, e-mail: info@fatrafol.cz, www.fatrafol.cz

DETAIL 608 T

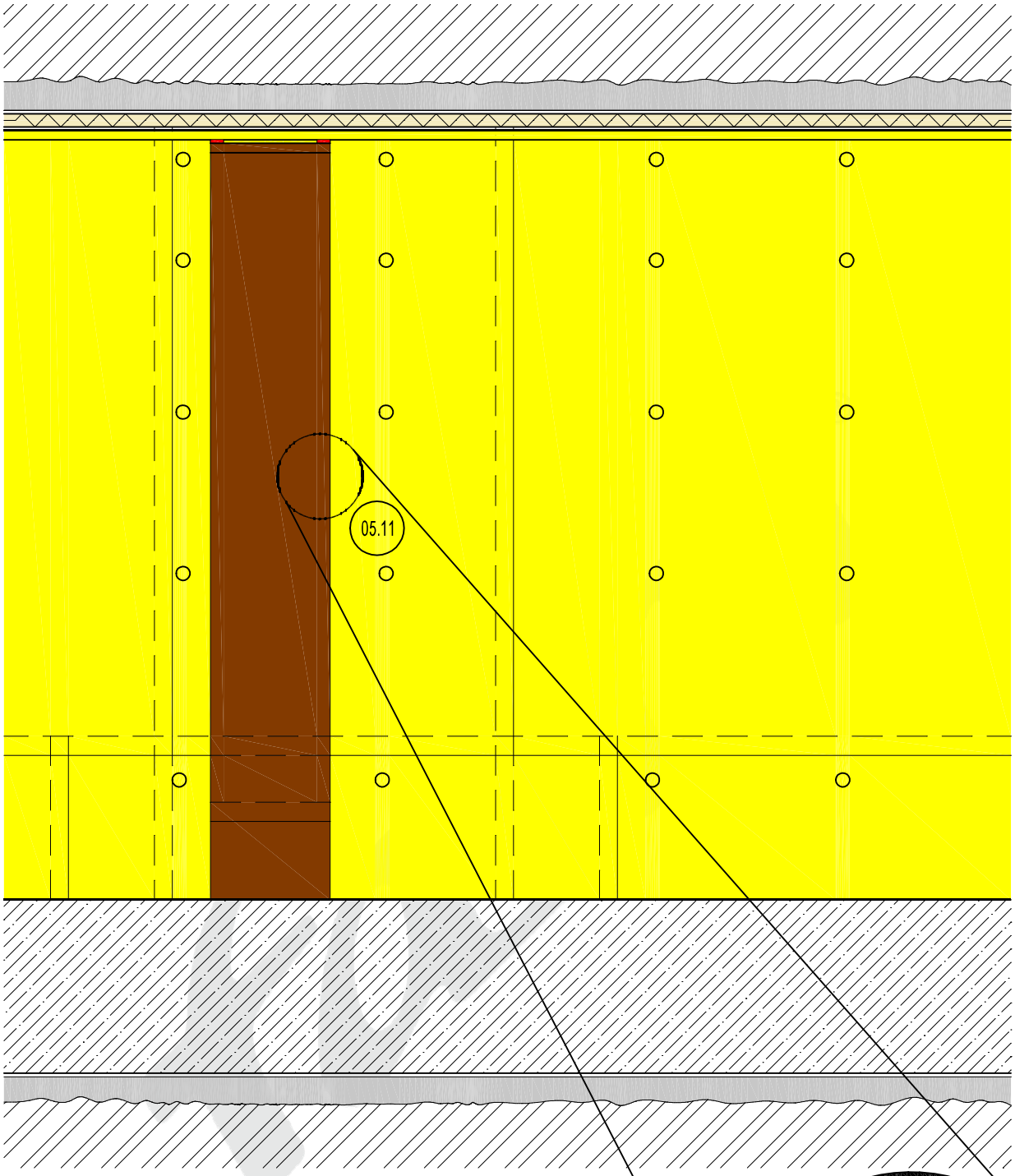

01.24	ROCK MASSIF
03.13	PRIMARY LINING
03.14	SECONDARY LINING
03.15	CONSTRUCTION JOINT
05.11	FATRAFOL 803, 803/V
05.16	FATRAFOL 803/VST
08.10	SEPARATION TEXTILE
09.11	HOT AIR WELD
09.12	DOUBLE TRACK HOT AIR WELD
10.53	FIXING DISK + MECHANICAL FASTENER

Open waterproofing system - 9. stage - installation of reinforcing PVC-P membrane on the rest of Bench and Top heading perimetr

DATE 01/2017

Fatra, a.s., třída Tomáše Bati 1541, 763 61 Napajedla, Česká republika
tel. +420 577 501 111, fax. +420 577 502 555, e-mail: info@fatrafol.cz, www.fatrafol.cz

DETAIL 609 T

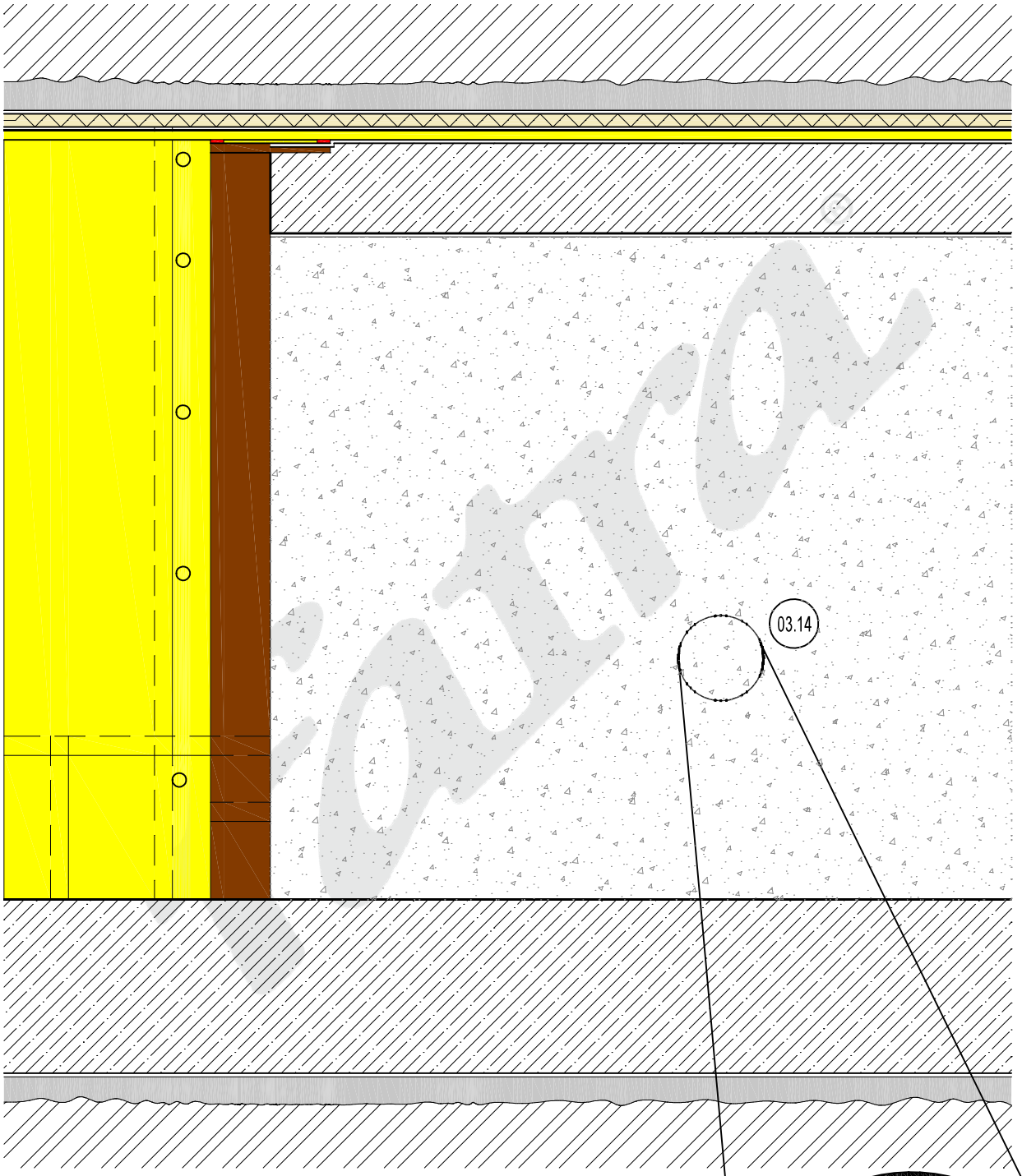

01.24	ROCK MASSIF
03.13	PRIMARY LINING
03.14	SECONDARY LINING
03.15	CONSTRUCTION JOINT
05.11	FATRAFOL 803, 803/V
05.16	FATRAFOL 803/VST
08.10	SEPARATION TEXTILE
09.11	HOT AIR WELD
09.12	DOUBLE TRACK HOT AIR WELD
10.53	FIXING DISK + MECHANICAL FASTENER

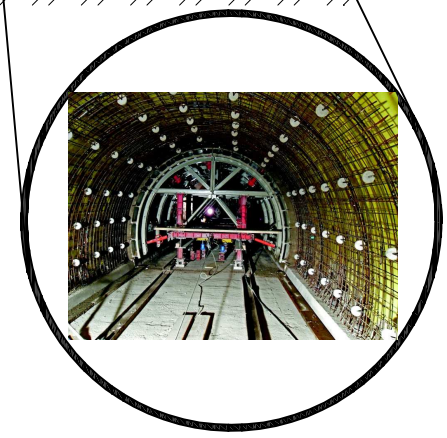

Open waterproofing system - 10. stage - concreting Secondary linning in stages

DATE 01/2017

fatra

Fatra, a.s., třída Tomáše Bati 1541, 763 61 Napajedla, Česká republika
tel. +420 577 501 111, fax. +420 577 502 555, e-mail: info@fatrafol.cz, www.fatrafol.cz

DETAIL 610 T

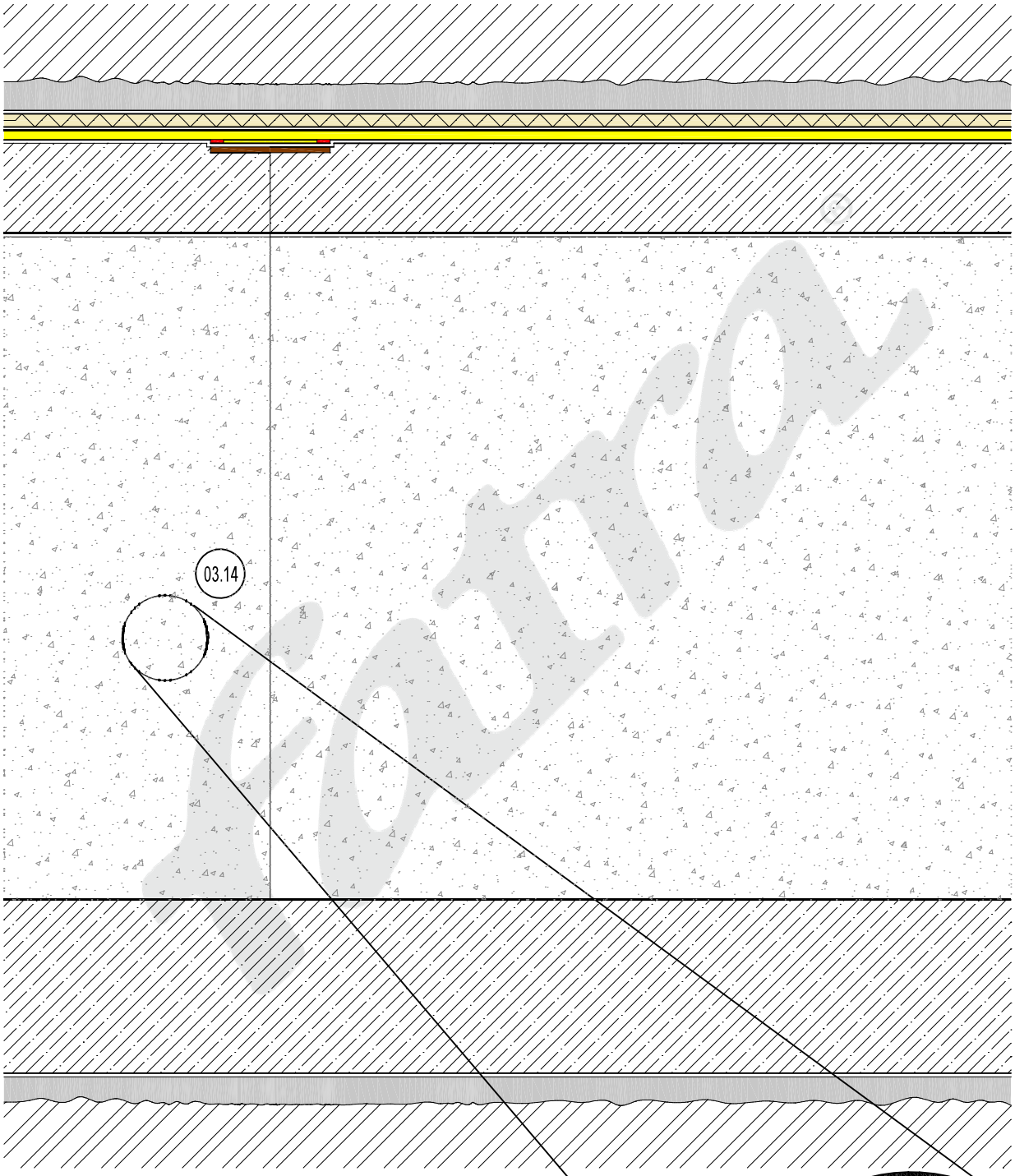

01.24	ROCK MASSIF
03.13	PRIMARY LINING
03.14	SECONDARY LINING
03.15	CONSTRUCTION JOINT
05.11	FATRAFOL 803, 803/V
05.16	FATRAFOL 803/VST
08.10	SEPARATION TEXTILE
09.11	HOT AIR WELD
09.12	DOUBLE TRACK HOT AIR WELD
10.53	FIXING DISK + MECHANICAL FASTENER

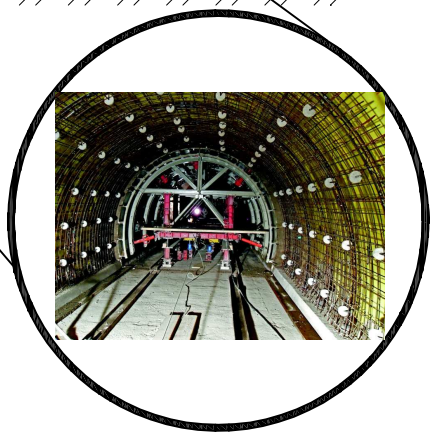

Open waterproofing system - 11. stage - concreting Secondary linning in stages, next segment

DATE 01/2017

Fatra, a.s., třída Tomáše Bati 1541, 763 61 Napajedla, Česká republika
tel. +420 577 501 111, fax. +420 577 502 555, e-mail: info@fatrafol.cz, www.fatrafol.cz

DETAIL 611 T

01.24	ROCK MASSIF
03.13	PRIMARY LINING
03.14	SECONDARY LINING
03.15	CONSTRUCTION JOINT
05.11	FATRAFOL 803, 803/V
05.16	FATRAFOL 803/VST
08.10	SEPARATION TEXTILE
09.11	HOT AIR WELD
09.12	DOUBLE TRACK HOT AIR WELD
10.53	FIXING DISK + MECHANICAL FASTENER

Open waterproofing system - 12. stage - after tunel inspection

DATE 01/2017

fatra
Fatra, a.s., třída Tomáše Bati 1541, 763 61 Napajedla, Česká republika
tel. +420 577 501 111, fax. +420 577 502 555, e-mail: info@fatrafol.cz, www.fatrafol.cz

DETAIL 612 T